ARTISAN SHWR PK

ARTISAN Shower Range
Artisan Shower Pack Complete

Specification

Finish/Colour:	Chrome Plated
Main Construction Material:	Brass
No of Controls:	2
Shower Type:	Dual Control
Shower Head Type:	Fixed Head and Handset
Valve/Cartridge Type:	3/4" Ceramic Disc Valve 1/4 turn
Maximum Hot Water Supply Temperature °C:	65
Maximum Static Pressure: (bar)	10
Plumbing System Suitability:	Suitable for all plumbing systems
Minimum Dynamic Pressure:	0.2 bar
Maximum Dynamic Pressure:	5.0 bar
Connection Inlet:	15mm Compression
Connection Outlet:	G 1/2"
Isolation Valve Included:	No
Check Valve Included:	Yes

Features:

- This simplistic shower pack contains an Artisan shower valve with an integral two outlet diverter. It has a 200mm round fixed head with shower arm; a single function handset and hose with integral handset holder and wall outlet.
- The shower valve has been designed to fit in any UK wall cavity and therefore only needs a 35mm deep cavity space
- Dual control - flow and temperature are controlled separately.
- Fully serviceable from the front
- Wall outlet designed with Bristan's wall mount Technology for easier installation.

Dimensions (measurements in mm)

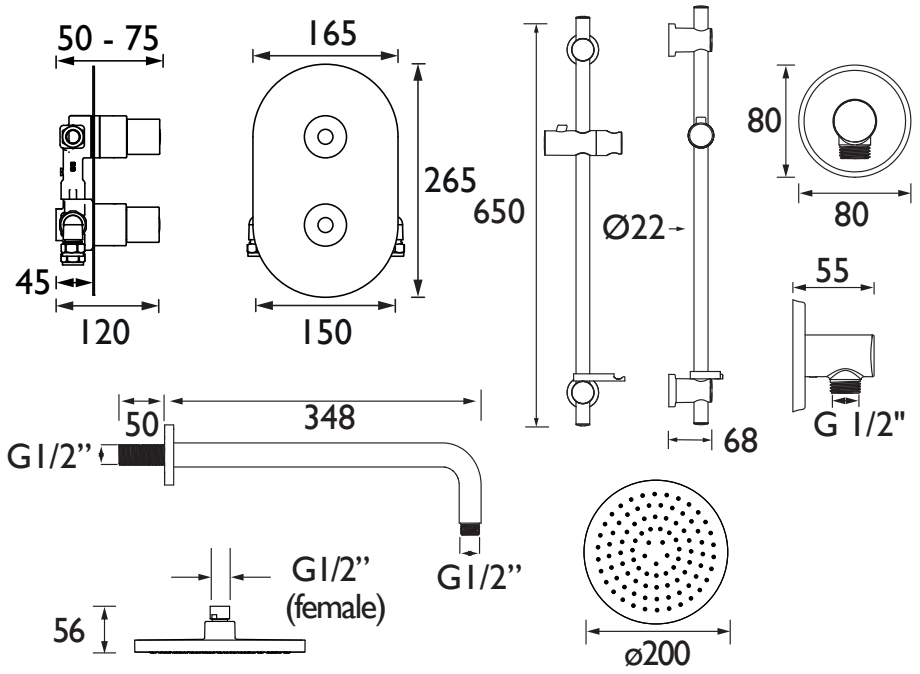

Product Certifications:

8.6 L/Min

For more products, visit our website:
http://www.bristan.com

Flow Rates (l/min)

System Pressure (bar)	0.2	0.5	1	2	3	5
Fixed Head	2.2	3.5	5.0	7.0	8.6	11.1
Through Handset	2.1	3.3	4.7	6.6	8.1	10.5

TECHNICAL DATA SHEET

TOP QUALITY 5 YEAR GUARANTEED

BRISTAN

D3

Bristan, Birch Coppice Business Park, Dordon, Tamworth, B78 1SG. Web Site: www.bristan.com Telephone: 0330 026 6273. Email: enquire@bristan.com.
The information contained on this page was correct at date of issue. Fitting Dimensions are provided as a guide only. Some variation may occur due to manufacturing tolerances. Bristan pursues a policy of continuing improvement in design and performance of its products and so reserves the right to change specifications without prior notice.