DUL2 SHXARFF C

DU LEVER Shower Range
Design Utility Lever Bar Mixer with Adjustable Riser Kit and Fast Fit Wall Fixings

Specification

Finish/Colour:	Chrome
Main Construction Material:	Brass
No of Controls:	2
Shower Type:	Bar Shower
Shower Head Type:	Adjustable
Valve/Cartridge Type:	Thermostatic
Maximum Hot Water Supply Temperature °C:	65
Maximum Static Pressure: (bar)	10
Plumbing System Suitability:	All, Ideally Balanced
Working Pressure Range:	Min: 0.2 Bar, Max: 5 Bar
Connection Inlet:	15mm Compression
Connection Outlet:	G 1/2”
Isolation Valve Included:	Yes
Check Valve Included:	Yes

Features:

- 15mm inlet connections
- Thermostatic cartridge with preset temperature stop at 38°C, can be over-ridden to a maximum of 46°C
- Supplied with easy to use lever handles
- Dual control - flow and temperature are controlled separately
- Supplied with our wallmount 12 fixing kit. The simplest solution for installing, maintaining and replacing bar showers, using built in front-of-wall isolation valves

Dimensions (measurements in mm)

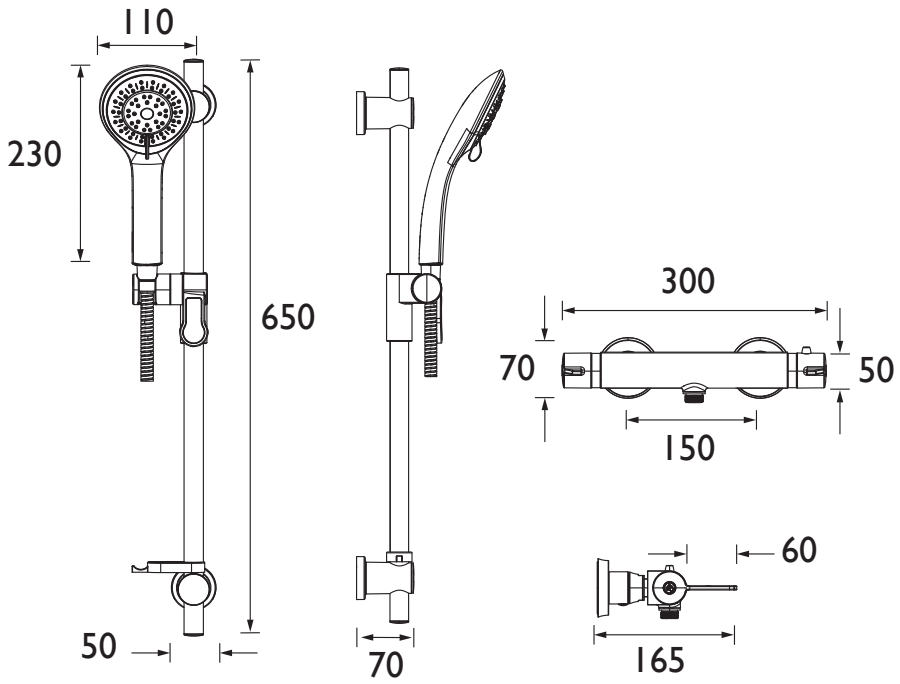

Product Certifications:

WRAS APPROVED PRODUCT

WRAS Certificate No: 2005902
WRAS Expiry Date: 31/05/2025

Certified to NSF TMV2

TMV Cert. Number: NSF2262/0720
TMV Expiry Date: 16/07/2025

For more products, visit our website:
http://www.bristan.com

Flow Rates (l/min)

System Pressure (bar)	0.2	0.5	1	2	3	5
Flow Mode 1	2	3.6	5.5	8.2	10.4	13.4
Flow Mode 2	2.3	4.2	6.4	9.6	12	15.4
Flow Mode 3	1.8	3.5	5.3	7.7	9.7	12.5

TECHNICAL DATA SHEET

TOP QUALITY 5 YEAR GUARANTEED

BRISTAN

D6

Bristan, Birch Coppice Business Park, Dordon, Tamworth, B78 1SG. Web Site: www.bristan.com Telephone: 0330 026 6273. Email: enquire@bristan.com.
The information contained on this page was correct at date of issue. Fitting Dimensions are provided as a guide only. Some variation may occur due to manufacturing tolerances. Bristan pursues a policy of continuing improvement in design and performance of its products and so reserves the right to change specifications without prior notice.