3ONE6

Basin Monobloc With No Pop-Up Waste

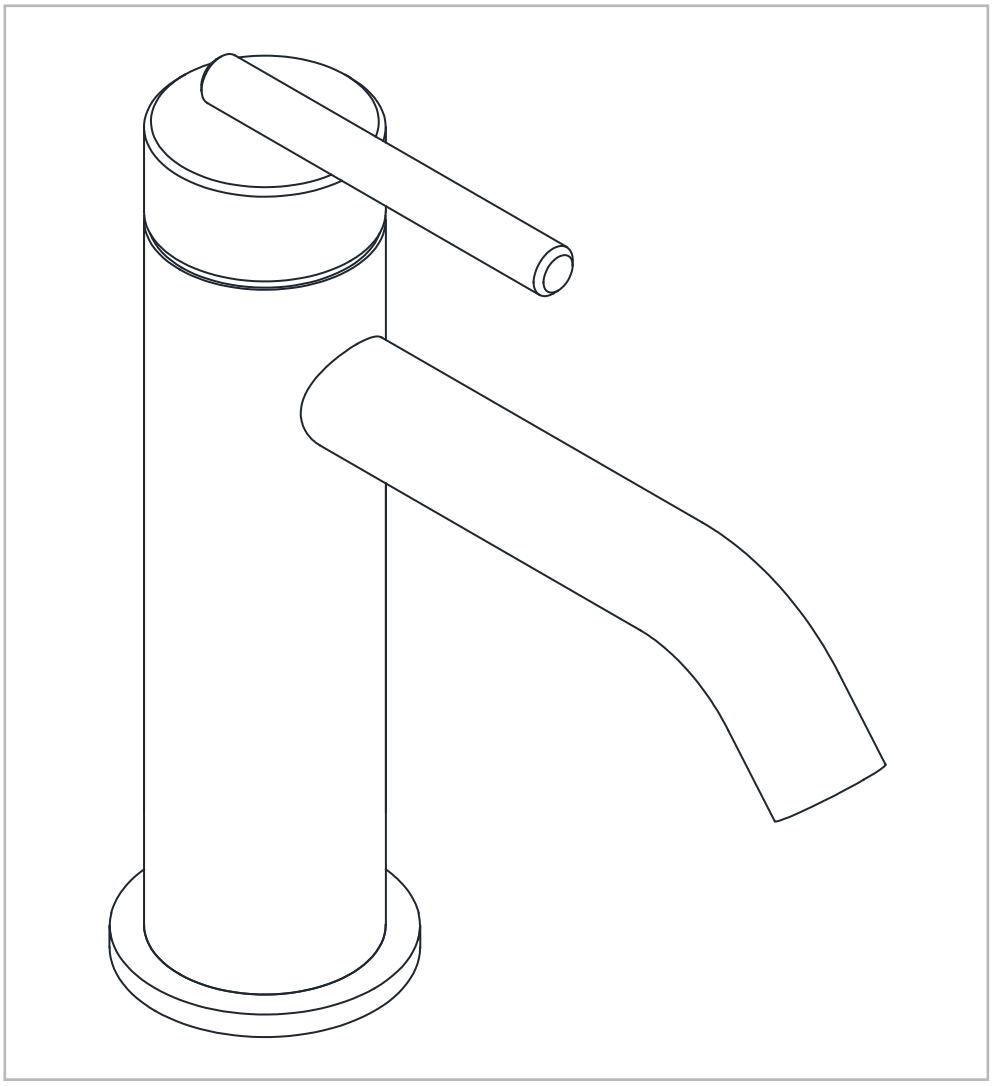

PRODUCT CODES:

TL114DNS/F/T

The product should only be installed by a suitably qualified plumber/installer.

IMPORTANT INFORMATION BEFORE YOU START

Please read carefully and keep this information for further reference.

All products manufactured and supplied by Crosswater are safe provided they are installed, used correctly and receive regular maintenance in accordance with these instructions. If you are in any doubt about your ability to install this product safely you must employ the services of an experienced qualified plumber.
These fittings need to be installed in accordance with,and meet the requirements of the Water Supply (Water Fittings) Regulations 1999 and Scottish Byelaws 2004.

Operating pressure range: Minimum 0.2 bar, Maximum 5.0 bar.
Maximum static pressure: 10.0 bar.
Note: Nominally equal (balanced) inlet supply pressures are recommended for optimum performance with mixer taps.

Designed to comply with BS EN 200 for single taps / combination taps and BS EN 817 for single lever mixers, for water systems of type 1 and 2 general technical specifications and to be used within systems designed to BS 6700.
BS 6700 recommends the temperature of stored water should never exceed 65°C.

A stored water temperature of 60°C is considered sufficient to meet all normal requirements and will minimise the build up of lime scale in hard water areas.
If the fitting is installed at low pressure(tank fed), then the minimum distance from the highest installed position of the outlet to the underside of the cold tank should be at least 2 metres to ensure adequate performance.

BEFORE YOU START

Important Pre-Installation Notes

Remove all packaging and check the fitting for damage before starting installation.

Warning: Before starting any installation please consider the following: before drilling into walls, check that there are no hidden electrical wires, cables or water supply pipes. This can be checked with the aid of an electronic detector.

If power tools are used do not forget to:
- Wear eye protection
- Unplug equipment after use

Important:

Remember to turn off the mains water supply before connecting to any existing pipe work. Fitting isolating valves to the inlet feeds is recommended for ease of maintenance.

Warning: Before installing the new fitting it is essential that you thoroughly flush through the pipework in order to remove any remaining swarf,solder,etc. Failure to carry out this procedure could cause problems or damage to the workings of the fitting.

Take care when handling the 'flexible connecting pipes',do not bend,twist or crush them. Only tighten the pipes by hand. Do not crush or kink the shower hose, this could damage the hose and cause leaks.

INSTALLATION

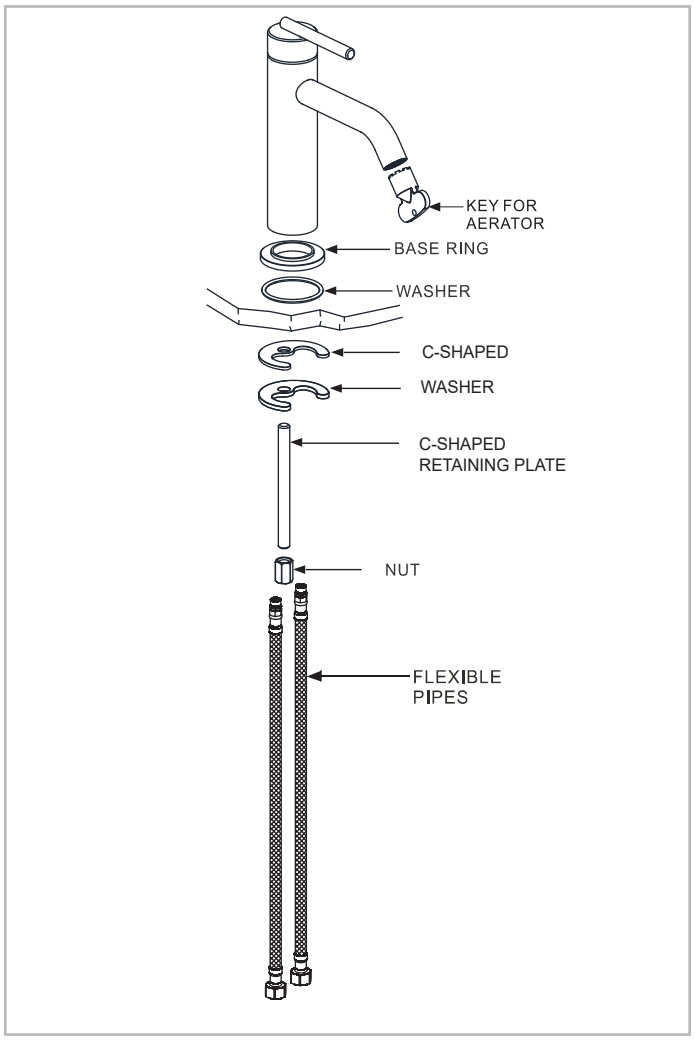

Screw the flexible pipes into the mixer body,and fully hand tighten. Place mixer in position to see if any alteration to the existing supply pipework is necessary. After making any necessary alterations to the pipework,pass the mixer base ring and washer over the flexible pipes and threaded stud to form a seal on sink top. Pass the tails and fixing stud through the hole in the basin from above and place the mixer in position on the basin.

Slide the C-shaped black washer and then the metal retaining plate up the tails and secure screwing the fixing nut finger tight.

Check that the mixer body is correctly positioned to the rear and tighten fixing nut. The tap needs to be fixed firmly but do not over tighten as damage may be caused to the sink.

If using copper tails,they will need to be gently turned outwards,then supported approximately half-way down and tuned inwards,making the two pipes parallel again but further apart thus making room for the couplings to be fitted. It is recommended that 15mm x 15mm compression fittings be used to connect mixer to supply pipes. Hot water should be connected to the left inlet when the tap is viewed from the front.

ATTENTION

Having first checked all new connections,turn on the mains stop cock,close all taps except the new mixer and as the system starts to refill check for leaks. Once you have satisfied yourself that there are no leaks,switch on the water heating.

DIMENSIONS

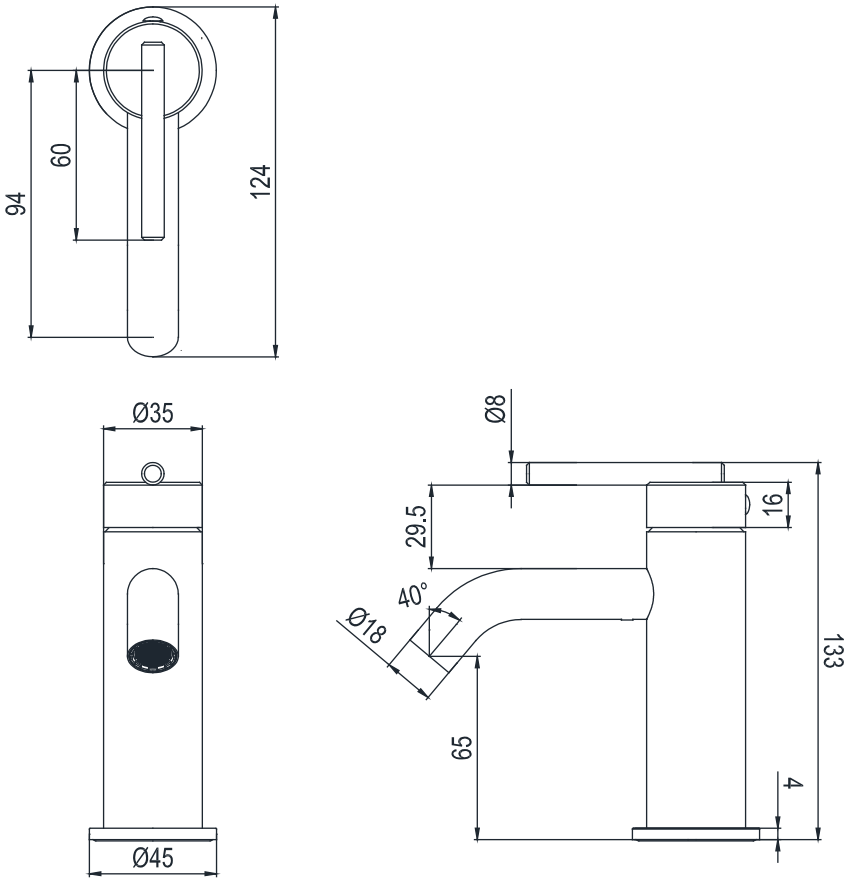

NOTE: ALL DIMENSIONS IN MILLIMETRES

IMPORTANT INFORMATION

Please read carefully and keep this information for further reference.

These taps and mixers should be installed in compliance with the Water Regulations.

Where the supplies are unbalanced, i.e. Hot water from cylinder tank / cold from the mains, approved check valves must be fitted in the supply pipes.

For further details contact your Local Water Authority.

CARE & MAINTENANCE

CLEANING THE CARTRIDGE

The concealed cartridge should give trouble free service, but in the event of any problems, servicing is straight forward.

To remove the cartridge:

Pull off the cover cap and with an hexagonal key loosen the screw,but do not remove it. Pull off the handle and unscrew the cover. Using the correct size spanner unscrew and remove the retaining nut. Pull out the cartridge taking note of its orientation. Wash the cartridge with clean running water and make sure that any trapped debris has been removed. Dry and lightly grease the seal (only use silicone grease) and replace the cartridge followed by the nut, cover and handle.

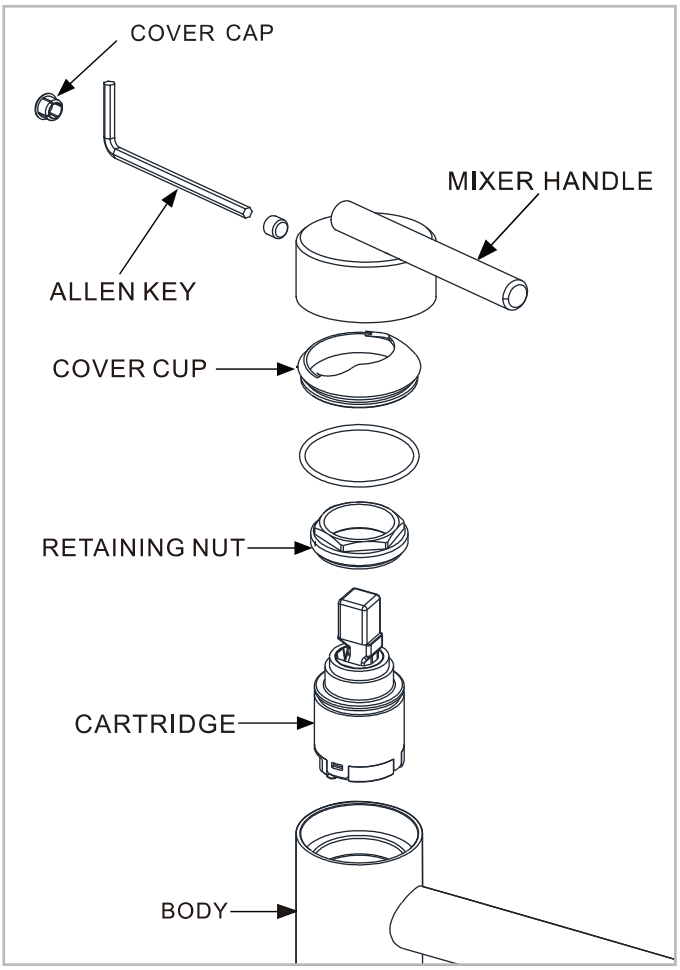

CLEANING THE PRODUCT

The material we use in our taps is very durable, nevertheless care should be taken when cleaning them. They should be cleaned only with warm soapy water followed by rinsing with clean water and drying with a soft cloth .All finishes are vulnerable to acid attack and some strong substances such as household cleaners, disinfectants, denture cleaners, hair dyes, wine making, and photographic chemicals can cause the surface to go black or peel.

Note: Never use abrasive detergents or disinfectants or those containing alcohol, hydrochloric acid or phosphoric acid.

CLEANING THE AERATOR

Before use: Unscrew the aerator and allow the water to run freely until all debris is removed. Screw the aerator back into the spout once all impurities have been flushed from the water supply.

Periodically: Using the key provided in the box, unscrew the aerator from the spout and rinse with clean running water. Once all loose debris and dirt has been cleared, replace the aerator into the spout and tighten with the key provided.

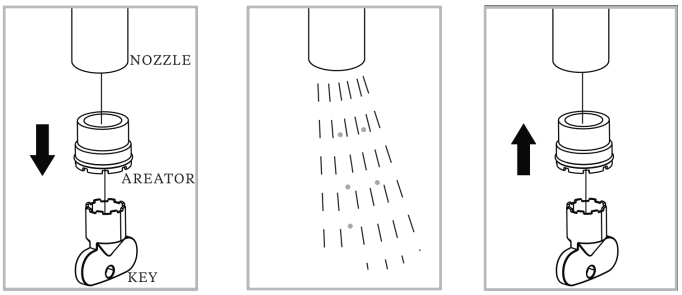

Lake View House
Rennie Drive, Dartford
Kent DA1 5FU
United Kingdom
0345 873 8840

www.crosswater.co.uk

Part of the
Bathroom Brands Group

We reserve the right to make technical modifications without prior notice.