Basin Waste Flip Top (Slotted) Chrome

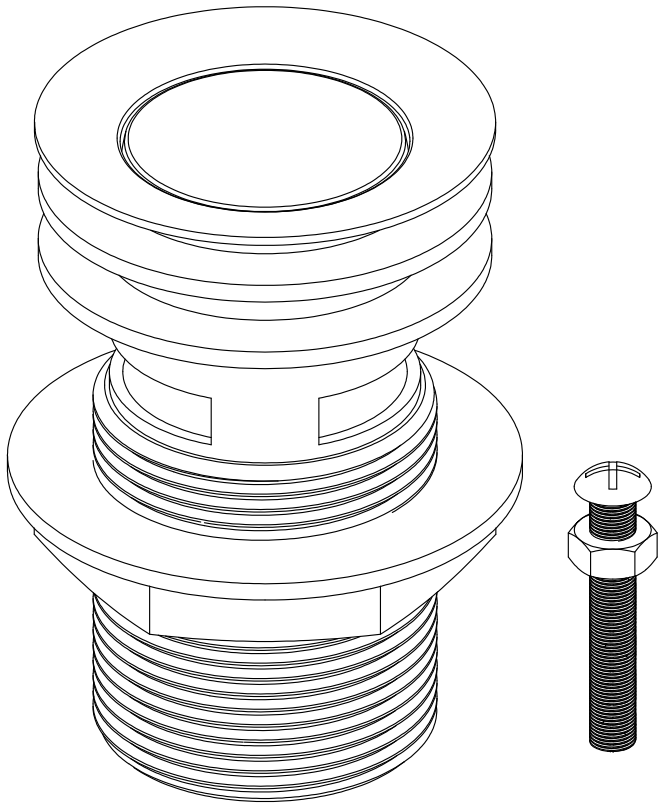

PRODUCT CODES:

BSW0141C
BUR_ BSW0141C

IMPORTANT INFORMATION BEFORE YOU START

Please read carefully and keep this information for further reference.

Thank you for buying a Bathroom Brands Product. To ensure that it works to its full potential, it needs to be fitted correctly.
Check the contents of the pack carefully before installation.
Bathroom Brands will not be held responsible for any de-fit/ re-fit costs where faulty product has been fted. If any fault is found with materials or workmanship, it must be reported immediately to the manufacturer. Remedial action will be taken, based on information received, on condition that:

1. Full details are supplied to the manufacturer.
2.The product has not been modified or tampered with;
3. The manufacturer is informed of any damage/shortages prior to installation.
4. The product has not been installed, or attempts have been made to install.

We do not accept responsibility for any problems that may occur through incorrect installation. This product should only be installed by a suitably qualified plumber/ installer.
Should the installation be completed by a non-qualified person any product guarantee maybe considered invalid.
For a claim made under our warranty, written certification of your installer's qualifications may be required.

INSTALLATION

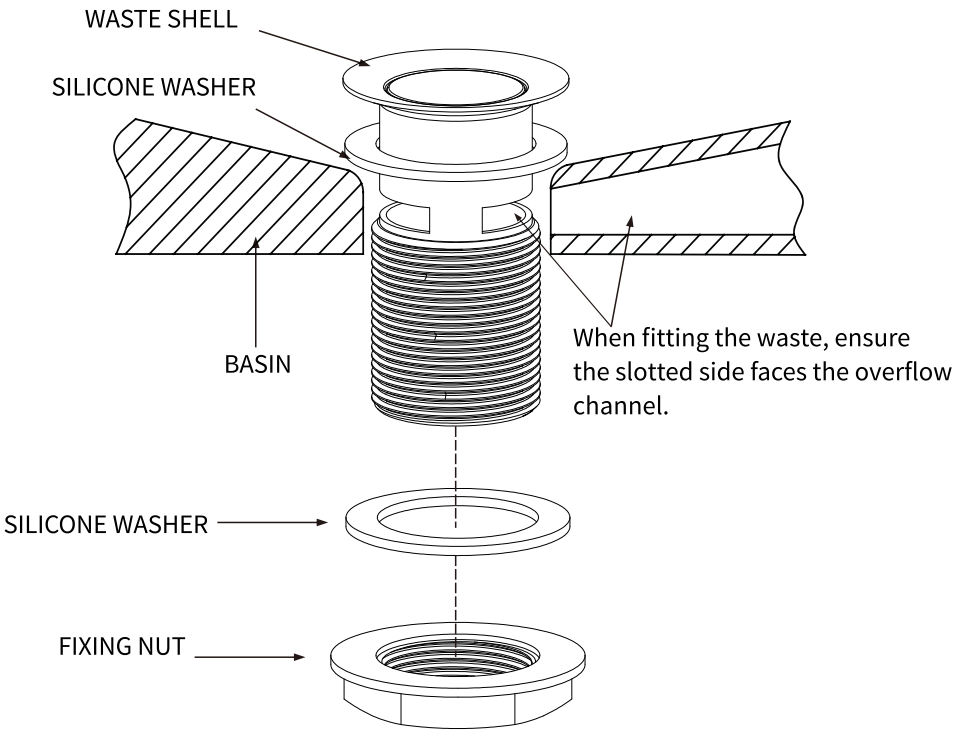

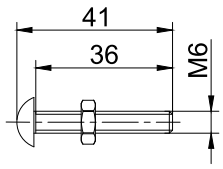

If the basin chain hole is not used, please cover it with the screw and nut supplied.

We reserve the right to make technical modifications without prior notice.