BATH WASTES

The product should only be installed by a suitably qualified plumber/installer.

BTW0201C

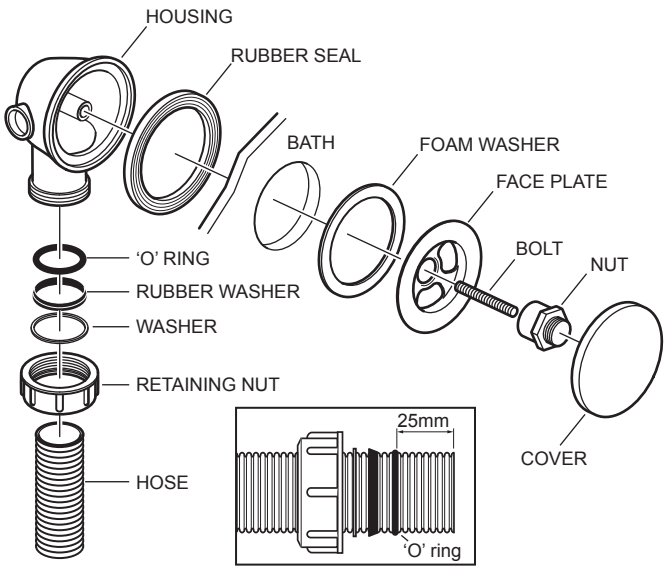

Push the rubber seal onto the housing, screw in the bolt and hold the unit in position from the outside of the bath. From the inside of the bath place the foam and face plate over the bath hole and screw on the nut, finally screw on the cover.
Prepare the hose by sliding on the retaining nut, clear washer, rubber washer, finally push the 'O' ring into position 25mm from the end (see detail). Push the hose assembly up into the housing and hand tighten the nut.

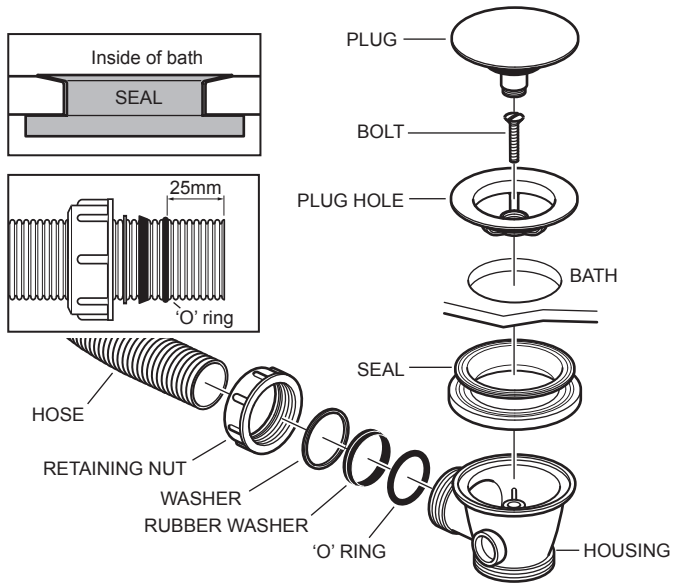

From below push the rubber seal into the hole in the bath (see detail), then push on the housing. From inside the bath place the plug hole in position on the seal, screw in the bolt and tighten **(use the small bolt for bath thicknesses up to 9mm and the large bolt for thicknesses from 9mm to 35mm)**, finally screw in the plug.
Prepare the hose by sliding on the retaining nut, clear washer, rubber washer. Finally push the 'O' ring into position 25mm from the end (see detail above). Push the hose assembly into the housing and hand tighten the nut.

BFW0301C

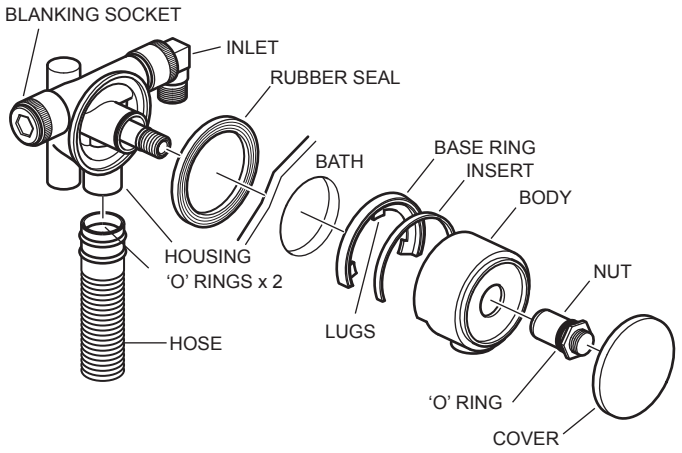

Prepare the assembly by pushing the 'O' ring onto the nut. Push the rubber seal onto the housing, and hold the unit in position from the outside of the bath. From the inside of the bath place the base ring over the bath hole, **if the hole is to small, snap off one of the lugs with a pair of long nose pliers**. Slide the insert and body into the base ring and screw on the nut, finally screw on the cover.
Push the hose onto the housing making sure that the 2 x 'O' rings are in position within the hose.
Finally connect up the inlet which can be positioned either side of the housing. An extra inlet elbow is supplied were dual feed supply is required, remove the blanking socket as required.

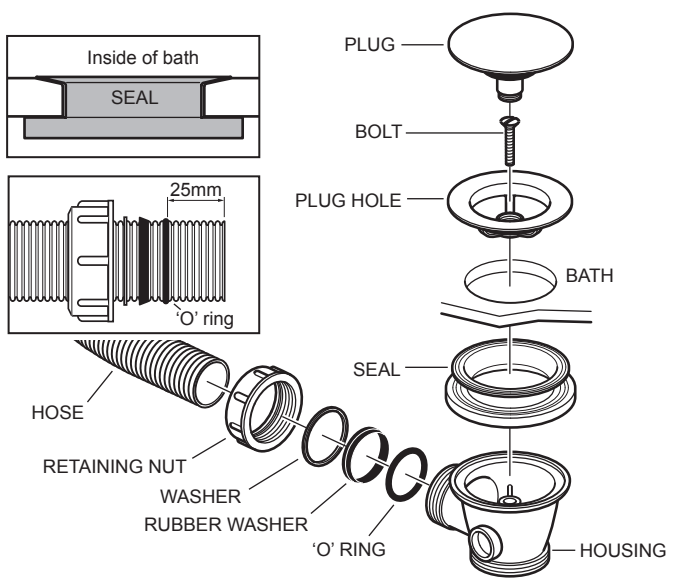

From below push the rubber seal into the hole in the bath (see detail), then push on the housing. From inside the bath place the plug hole in position on the seal, screw in the bolt and tighten **(use the small bolt for bath thicknesses up to 9mm and the large bolt for thicknesses from 9mm to 35mm)**, finally screw in the plug.
Prepare the hose by sliding on the retaining nut, clear washer, rubber washer. Finally push the 'O' ring into position 25mm from the end (see detail above). Push the hose assembly into the housing and hand tighten the nut.

INSTALLATION INSTRUCTIONS

crosswater

BATH WASTES

The product should only be installed by a suitably qualified plumber/installer.

BTW0241C

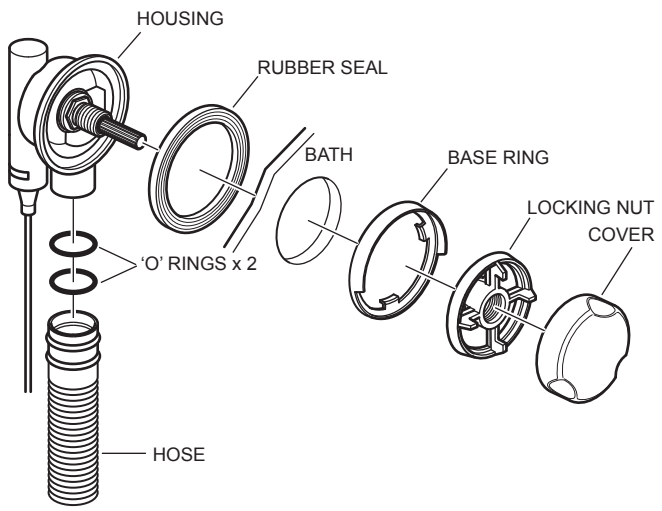

Push the rubber seal onto the housing, and hold the unit in position from the outside of the bath. From the inside of the bath place the base ring over the bath hole, screw on the locking nut, finally push the cover onto the splines of the housing.
Insert the 2 'O' rings into the grooves on the inside of the hose and push the hose onto the housing.

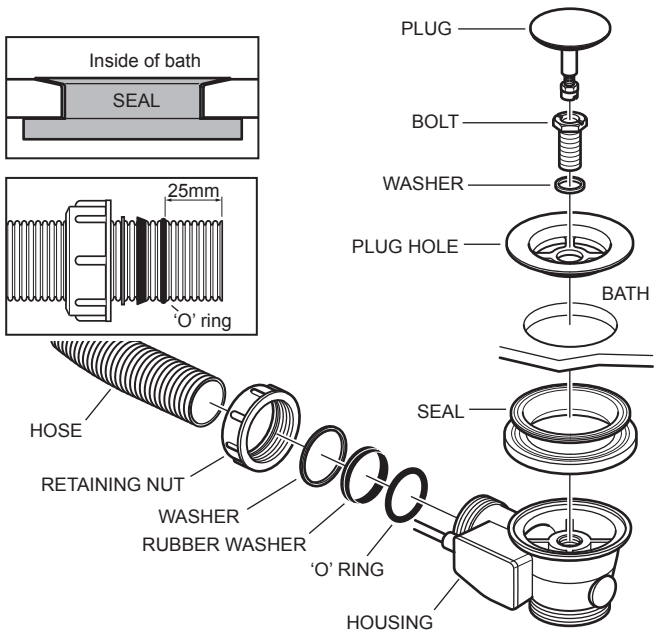

From below push the rubber seal into the hole in the bath (see detail), then push on the housing. From inside the bath place the plug hole in position on the seal, place the washer onto the bolt and screw in the housing **(use the small bolt for bath thicknesses up to 9mm and the large bolt for thicknesses from 9mm to 35mm)**. Place the plug into the hole. To adjust the plug release the nut, screw/unscrew the bolt until the required position is obtained, re-tighten the nut.
Prepare the hose by sliding on the retaining nut, clear washer, rubber washer. Finally push the 'O' ring into position 25mm from the end (see detail above). Push the hose assembly into the housing and hand tighten the nut.

BFW0341C

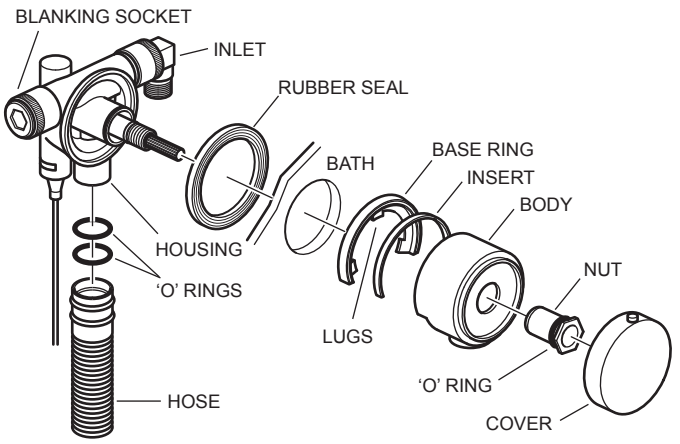

Prepare the assembly by pushing the 'O' ring onto the nut. Push the rubber seal onto the housing, and hold the unit in position from the outside of the bath. From the inside of the bath place the base ring over the bath hole, **if the hole is to small, snap off one of the lugs with a pair of long nose pliers**. Slide the insert and body into the base ring and screw on the nut, finally push on the cover.
Insert the 2 'O' rings into the grooves on the inside of the hose and push the hose onto the housing.
Finally connect up the inlet which can be positioned either side of the housing. An extra inlet elbow is supplied were dual feed supply is required, remove the blanking socket as required.

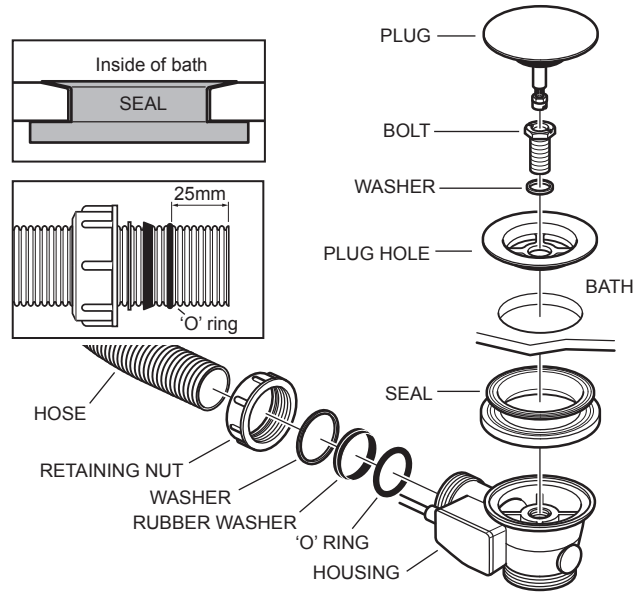

From below push the rubber seal into the hole in the bath (see detail), then push on the housing. From inside the bath place the plug hole in position on the seal, place the washer onto the bolt and screw in the housing **(use the small bolt for bath thicknesses up to 9mm and the large bolt for thicknesses from 9mm to 35mm)**. Place the plug into the hole. To adjust the plug release the nut, screw/unscrew the bolt until the required position is obtained, re-tighten the nut.
Prepare the hose by sliding on the retaining nut, clear washer, rubber washer. Finally push the 'O' ring into position 25mm from the end (see detail above). Push the hose assembly into the housing and hand tighten the nut.

crosswater

For any further information please contact Crosswater on:

0845 873 8840

Or visit our web-site at www.crosswater.co.uk

The manufacturer reserves the right to make technical modifications without prior notice.