INSTALLATION INSTRUCTIONS

Click Clack bath waste (unslotted) with chrome cover
- For use without internal overflow bath - CW2
Click Clack bath waste (unslotted) - chrome - CW2CW

Important

- We recommend that this product is installed by a qualified professional contractor. Such as a plumber who is certified by NVQ (National Vocational Qualification) or SNVQ (Scottish National Vocational Qualification) Level 3.
- Please check this product immediately to ensure that it has not been damaged and is complete. Before installation, please make sure this product is the correct model and you have all the parts required for installation and using.
- Please read these instructions carefully and keep it for future reference.

Installation

The waste cover is for reference only.

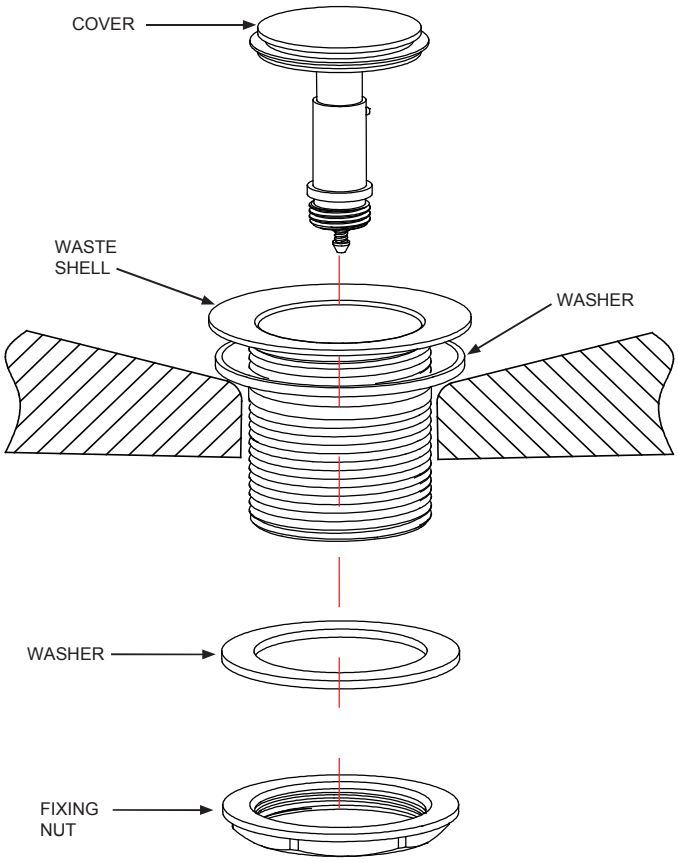

Dimension

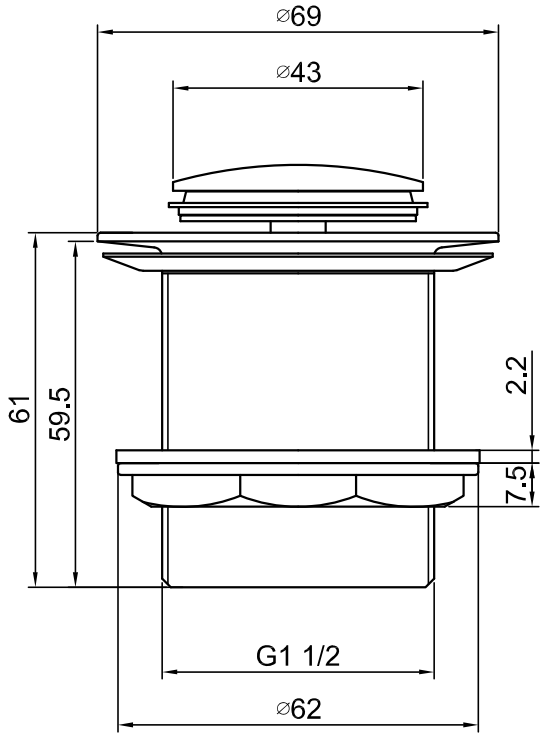

Maintenance

We do NOT recommend you use any household cleaners to clean the product. Aggressive chemicals can damage the finish and function of this product. The product should only be cleaned with soapy water and rinsed with clean water and dried with a soft cloth.