CROSSBOX

Belgravia Trimset and Handle Kit

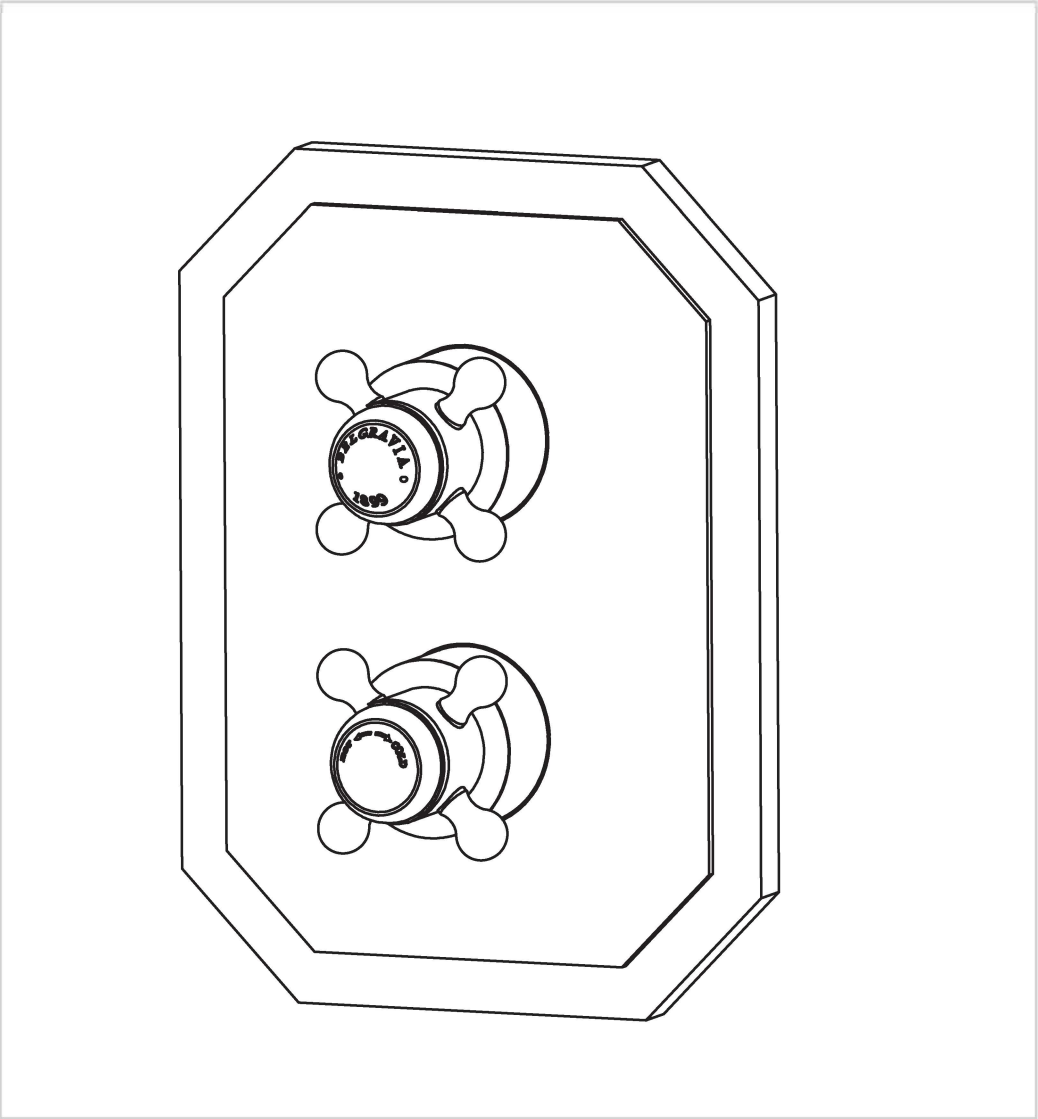

PRODUCT CODES:

BLCB

IMPORTANT INFORMATION BEFORE YOU START

Please read carefully and keep this information for further reference.

Thank you for buying a Crosswater Product. To ensure that it works to its full potential, it needs to be fitted correctly.

Check the contents of the pack carefully before installation.

Crosswater will not be held responsible for any de-fit/re-fit costs where faulty product has been fitted. If any fault is found with materials or workmanship, it must be reported immediately to the manufacturer. Remedial action will be taken, based on information received, on condition that:

1. Full details are supplied to the manufacturer.
2. The product has not been modified or tampered with;
3. The manufacturer is informed of any damage/shortages prior to installation.
4. The product has not been installed, or attempts have been made to install.

We do not accept responsibility for any problems that may occur through incorrect installation. This product should only be installed by a suitably qualified plumber/installer. Should the installation be completed by a non-qualified person any product guarantee maybe considered invalid. For a claim made under our warranty, written certification of your installer's qualifications may be required.

DIMENSIONS

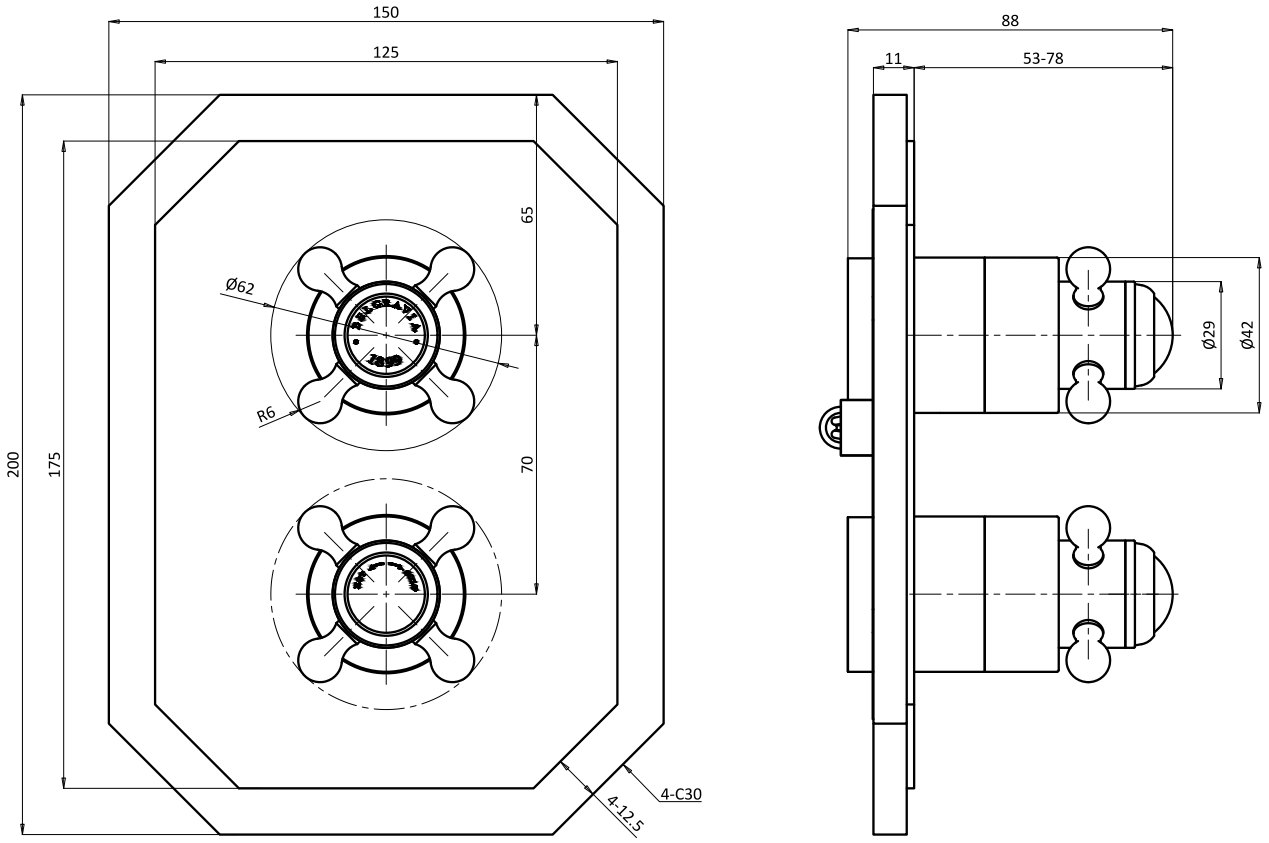

NOTE: ALL DIMENSIONS IN MILLIMETRES

IMPORTANT INFORMATION

Please read carefully and keep this information for further reference.

These taps and mixers should be installed in compliance with the Water Regulations.

Where the supplies are unbalanced, i.e. Hot water from cylinder tank / cold from the mains, approved check valves must be fitted in the supply pipes.

For further details contact your Local Water Authority.

BEFORE YOU START

Important Pre-Installation Notes

Remove all packaging and check the fitting for damage before starting installation.

Warning: Before starting any installation please consider the following: before drilling into walls, check that there are no hidden electrical wires, cables or wate supply pipes. This can be checked with the aid of an electronic detector.

If power tools are used do not forget to: -

Wear eye protection

Unplug equipment after use

Important:

Remember to turn off the mains water supply before connecting to any existing pipe work. Fitting isolating valves to the inlet feeds is recommended for ease of maintenance.

Warning: Before installing the new fitting it is essential that you thoroughly flush through the pipework in order to remove any remaining swarf, solder, etc. Failure to carry out this procedure could cause problems or damage to the workings of the fitting.

Take care when handling the 'flexible connecting pipes', do not bend, twist or crush them. Only tighten the pipes by hand. Do not crush or kink the shower hose, this could damage the hose and cause leaks.

COMPONENTS

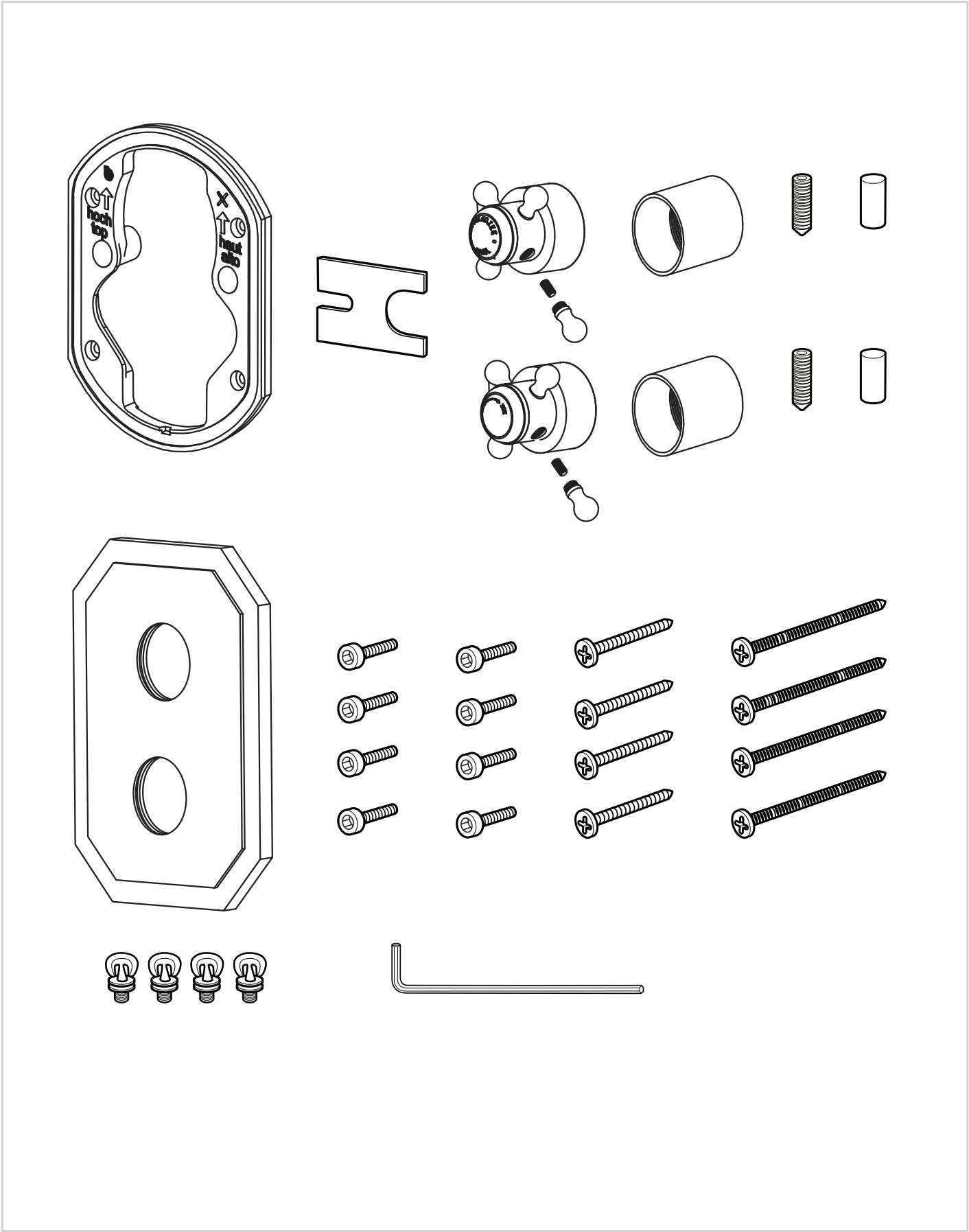

INSTALLATION

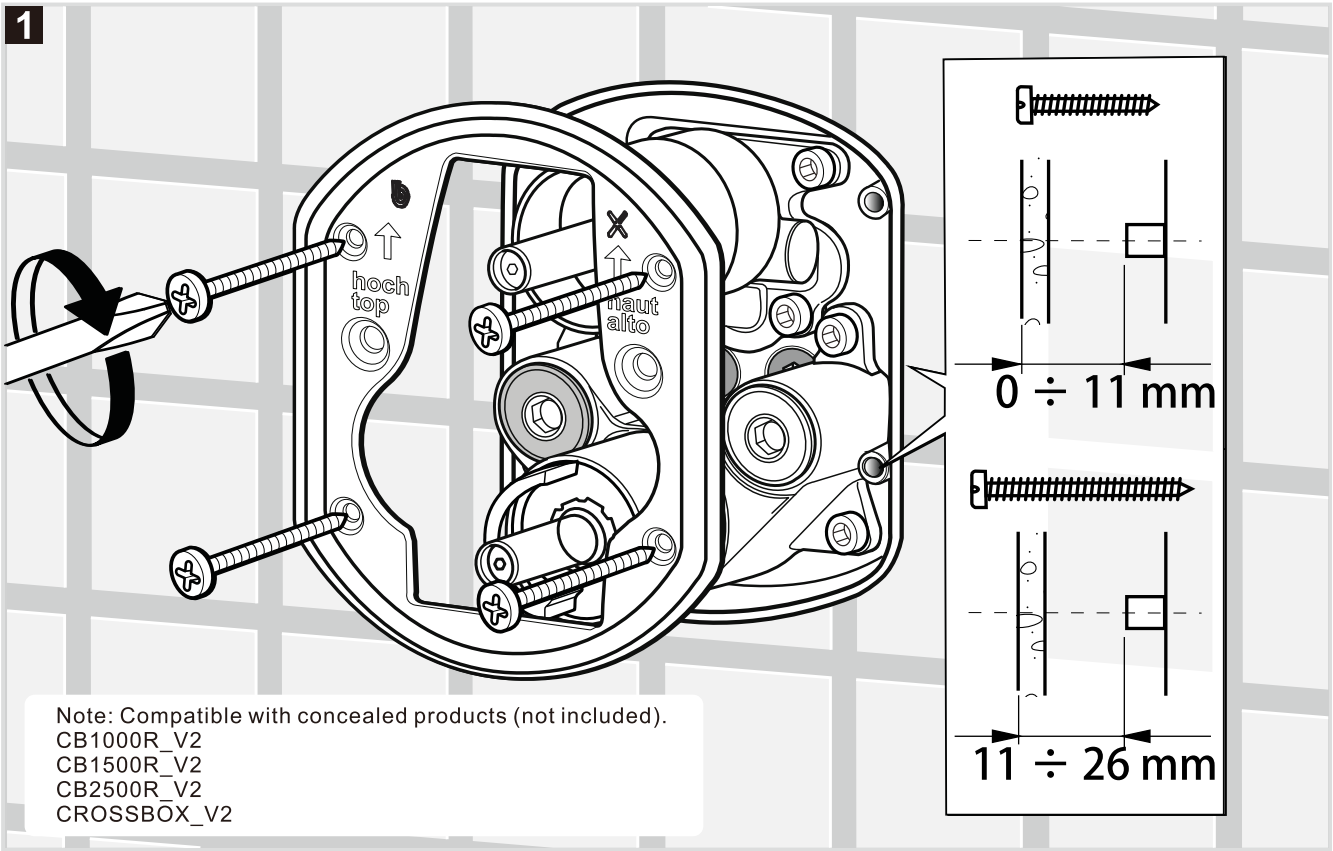

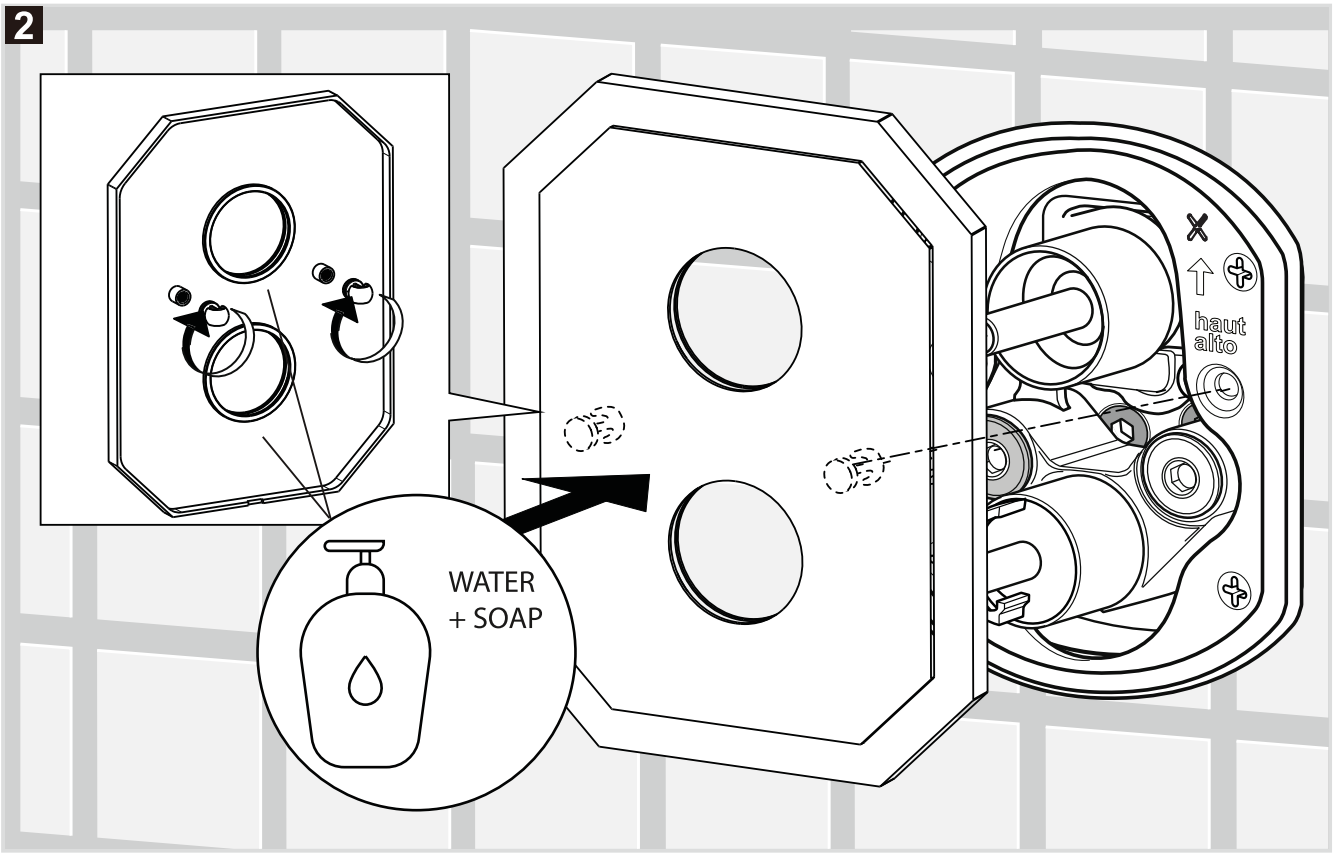

INSTALLATION

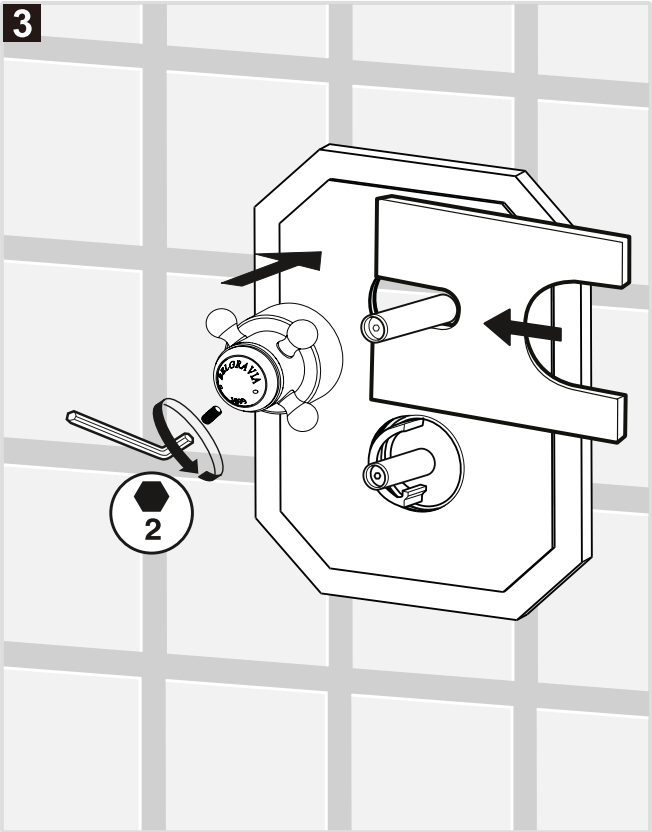

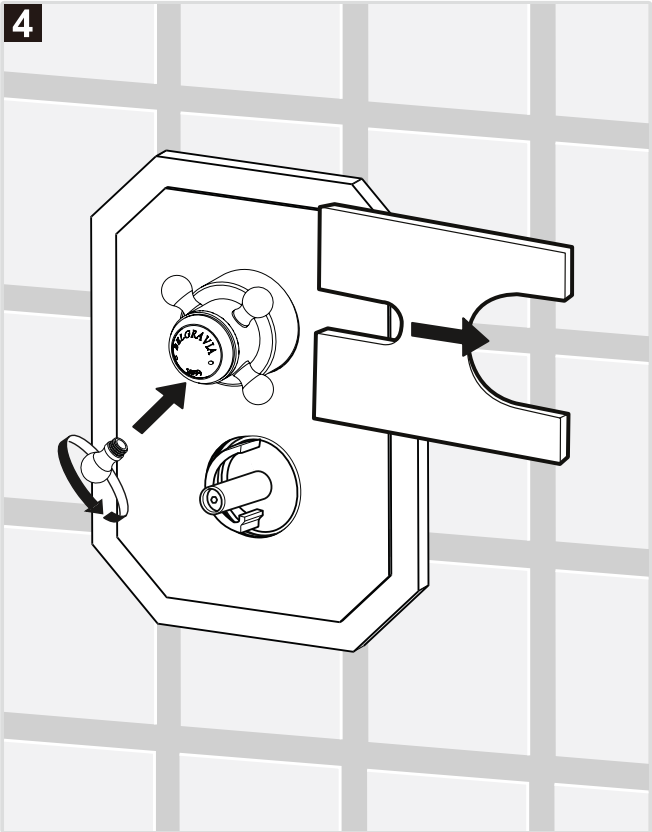

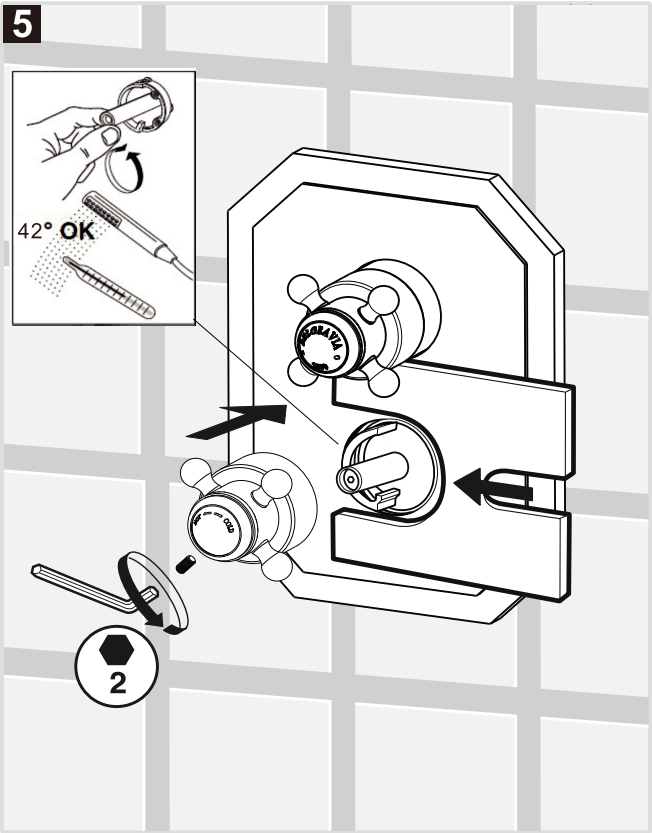

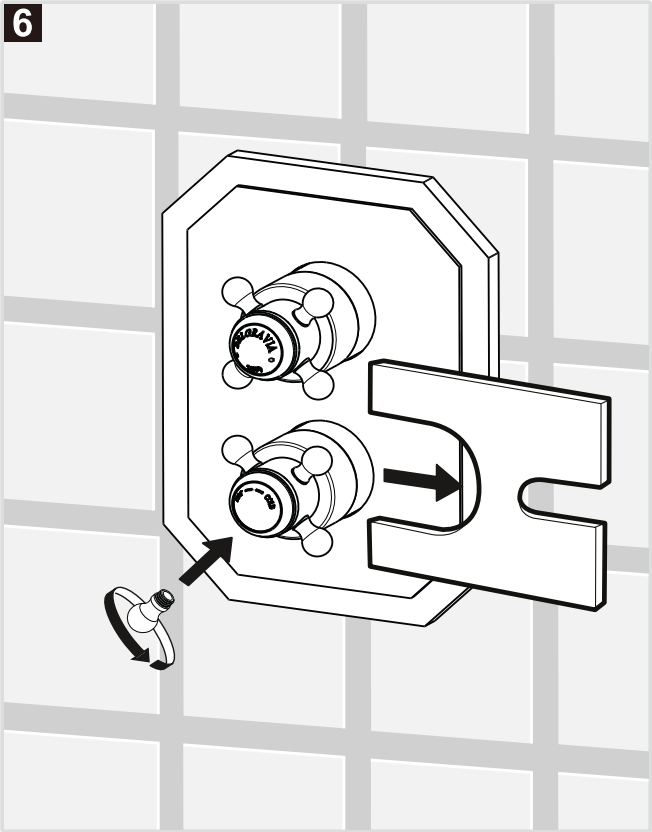

CARE & MAINTENANCE

The material we use in our accessories is very durable, nevertheless care should be taken when cleaning them. They should be cleaned only with warm soapy water followed by rinsing with clean water and drying with a soft cloth. All finishes are vulnerable to acid attack and some strong substances such as household cleaners, disinfectants, denture cleaners, hair dyes, wine making, and photographic chemicals can cause the surface to go black or peel.

Note: Never use abrasive detergents or disinfectants or those containing alcohol, hydrochloric acid or phosphoric acid.

Lake View House
Rennie Drive, Dartford
Kent DA1 5FU
United Kingdom
0345 873 8840
www.crosswater.co.uk

Part of the
Bathroom Brands Group

We reserve the right to make technical modifications without prior notice.

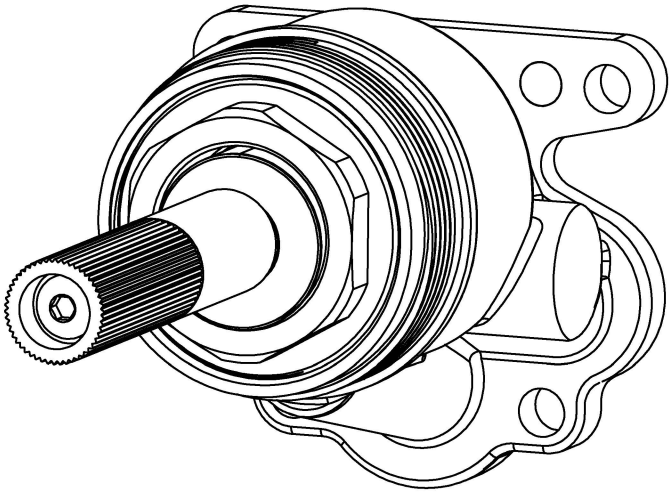

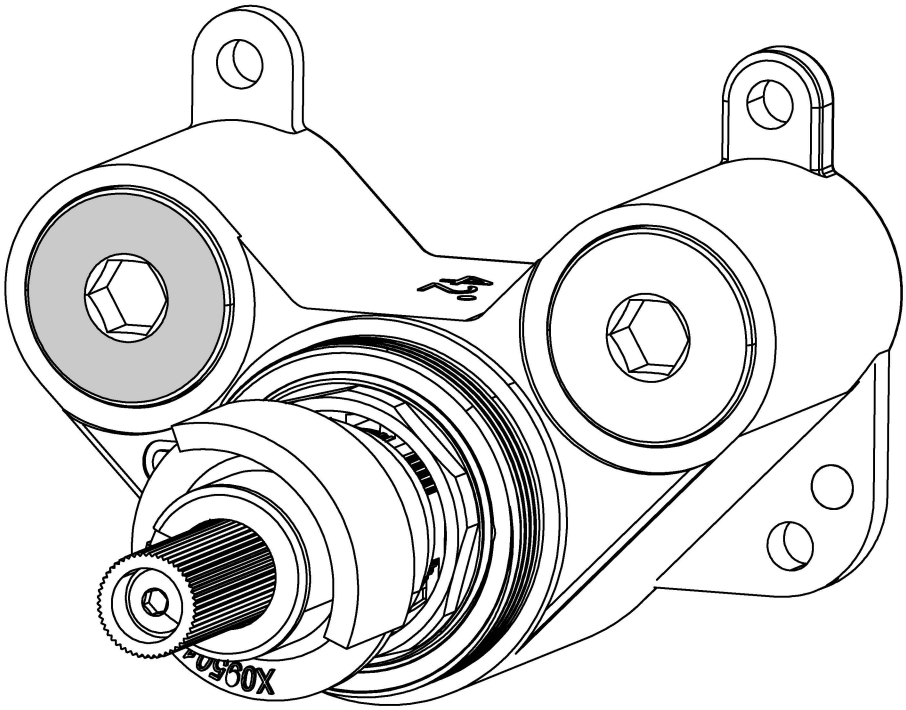

CROSSBOX VALVES 1-2-3 WAYS

MOUNTING INSTRUCTIONS

1 TECHNICAL FEATURES

Pressure range min/max 0.5/5 bar
(in case of water pressure higher than 5 bar we recommend installing pressure reducers).
Recommended pressure 3 bar.

Operation:
Either with gas or electric accumulation boilers.
Centralised systems.

The product should only be installed by a suitably qualified plumber/installer.

Safety lock at:	42° C
Min. Working temperature:	3° C
Min. recommended:	15° C
Max. Working temperature:	70° C
Max. recommended:	65° C
Recommended thermal differential	50° C

Thermal disinfection is allowed.

Automatic flow shut-off in the event of hot or cold water supply failure.

Warning: Consult a qualified plumber to determine the most suitable water heating system for your installation.

Press.	FLOW RATE (L/min)			
	1 way	2 ways		
bar	Exit 1/2/3	Exit 2	Exit 3	Mix
0.5	8.6	9.1	9.1	9.9
1	12.5	13.1	13.1	14.2
2	17.8	18.8	18.7	20.5
3	21.9	23.1	23.1	24.8
4	25.3	26.8	26.8	29.1
5	28.2	29.8	29.9	32.7

Press.	FLOW RATE (L/min)		
	3 ways		
bar	Exit 1	Exit 2	Exit 3
0.5	9.1	9.6	9.2
1	13.1	13.7	13.3
2	18.8	19.8	18.9
3	23.1	24.3	23.2
4	26.8	28.4	26.9
5	29.9	31.9	30

4 PRE-INSTALLATION INFORMATION

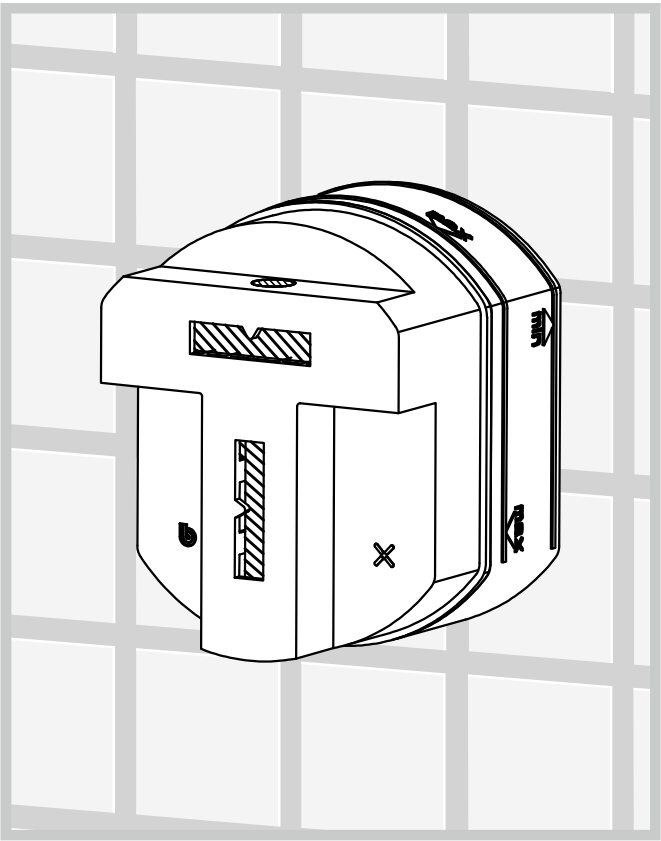

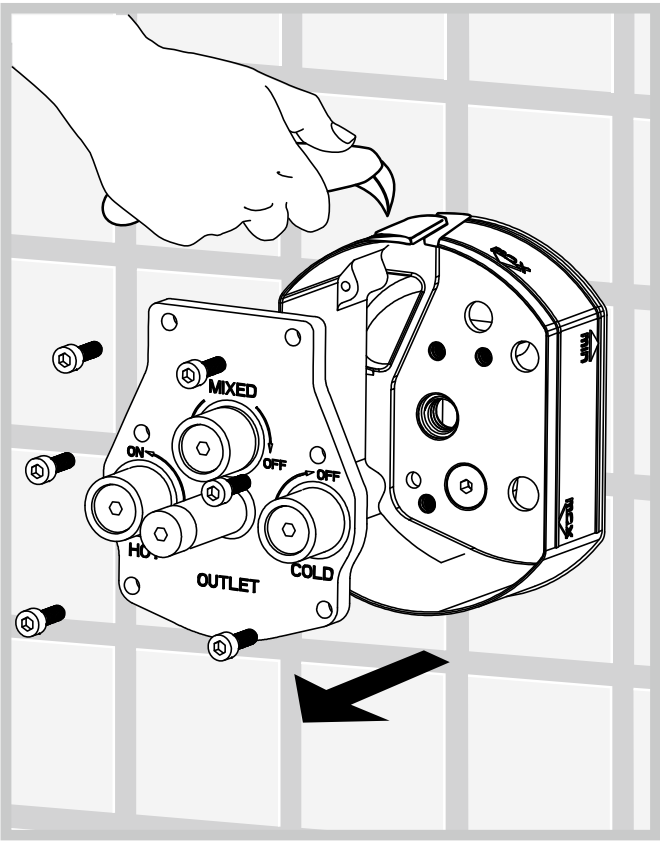

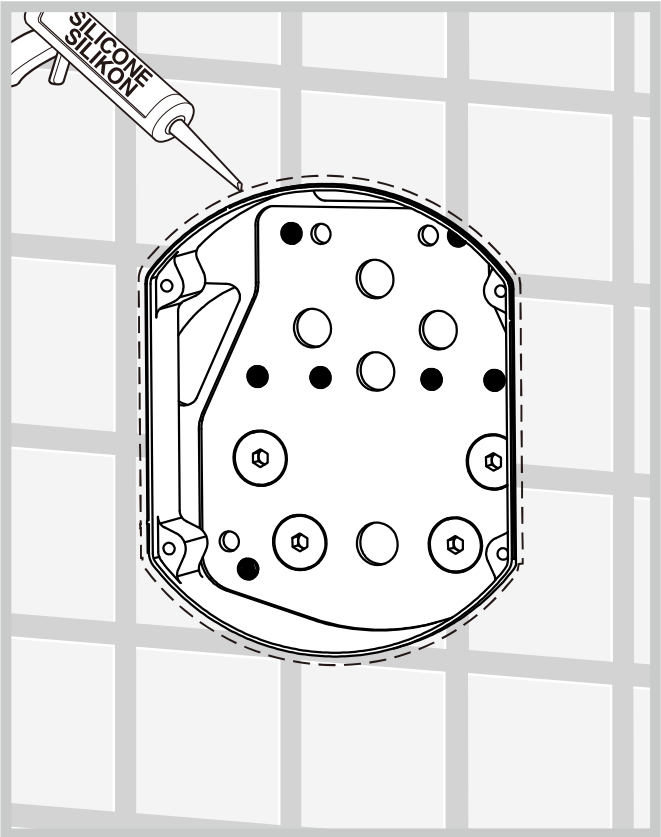

PACKAGE CONTENT - VALVE BODY 1-2-3WAYS

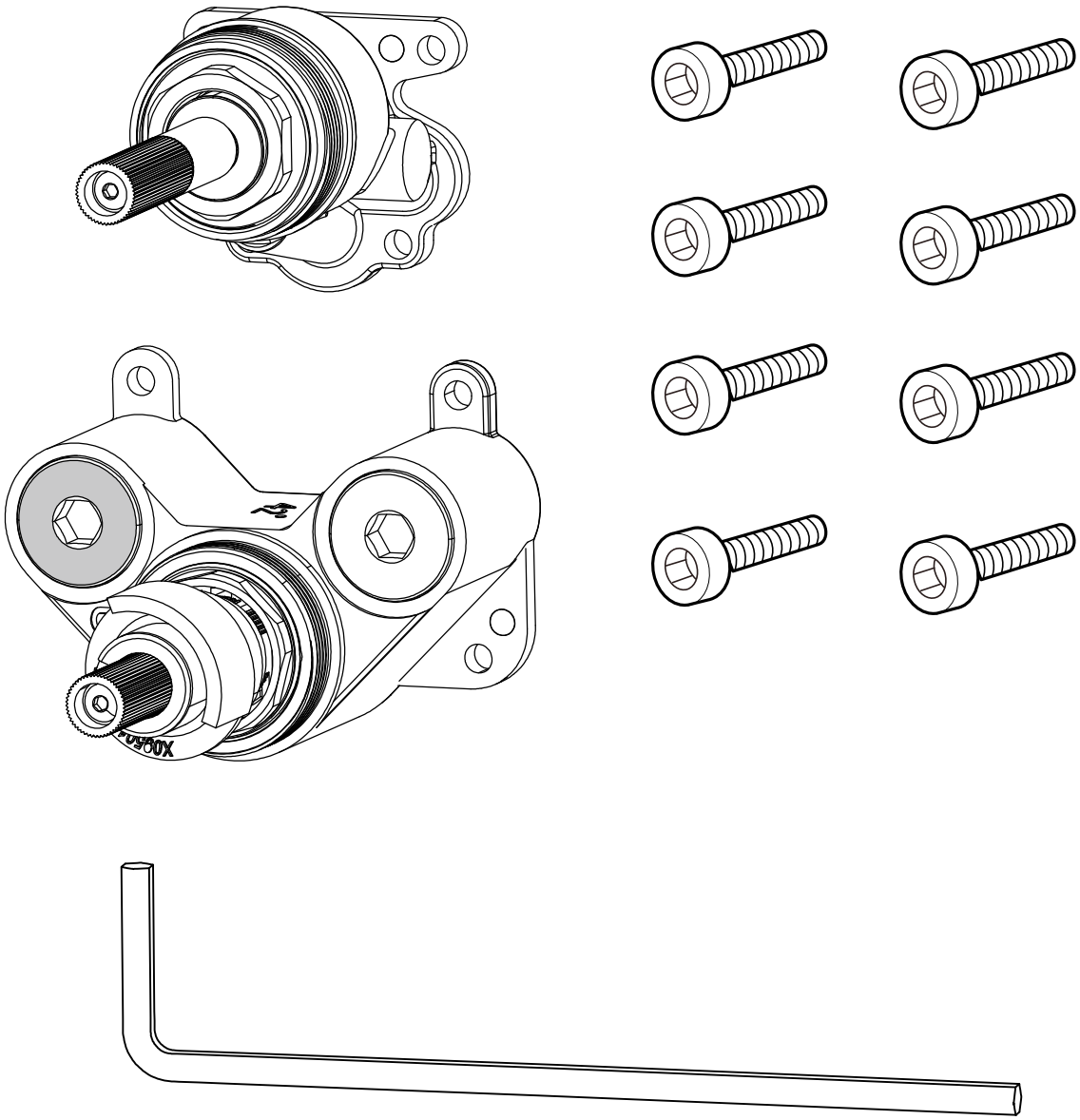

Mounting Instructions

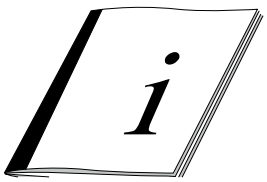

6 INSTALLATION FOR VALVES

1A

⚠ **ATTENTION:** For the base comes with positioning holes.

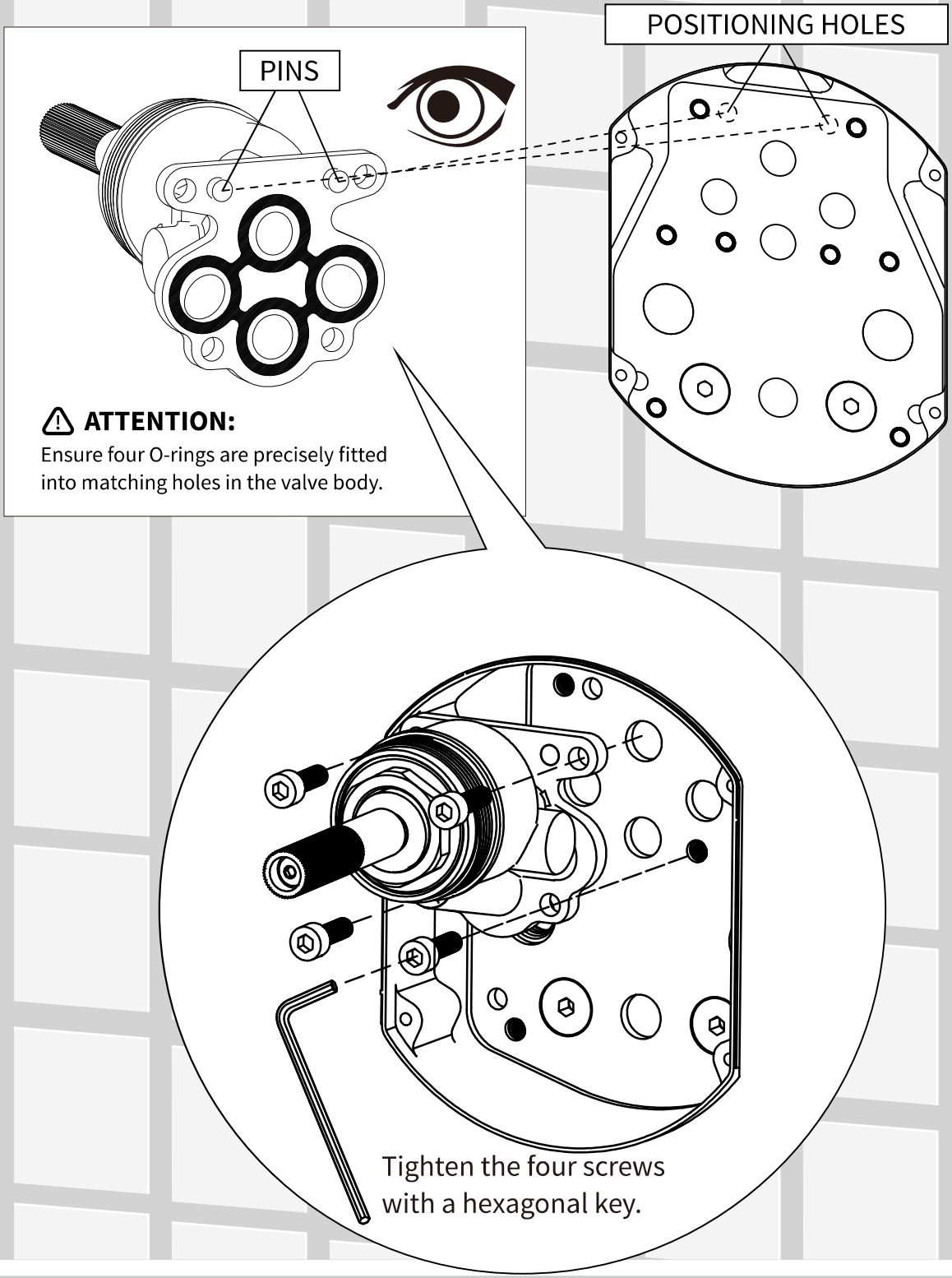

7 INSTALLATION FOR VALVES

2A

⚠ **ATTENTION:** For the base comes with positioning holes.

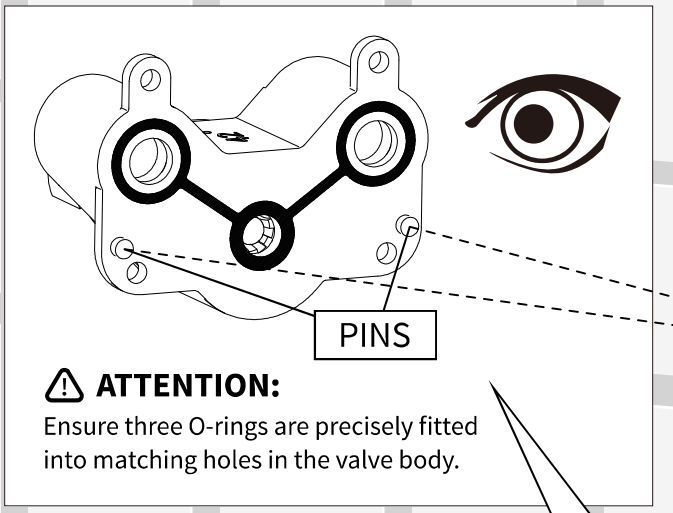

⚠ **ATTENTION:**
Ensure three O-rings are precisely fitted into matching holes in the valve body.

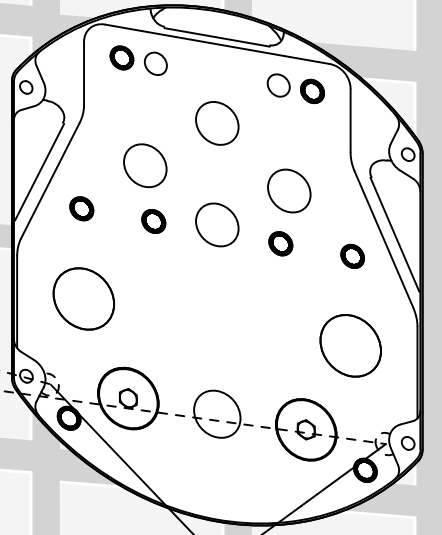

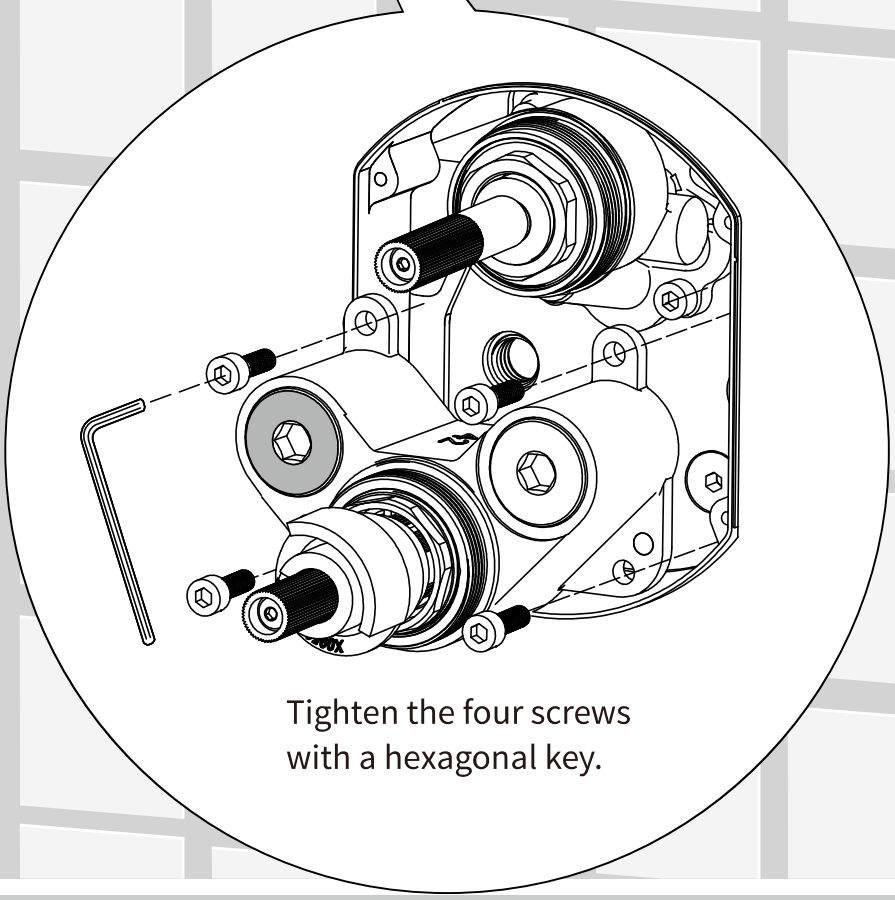

Tighten the four screws with a hexagonal key.

8 INSTALLATION FOR VALVES

1B

⚠ ATTENTION:

If the base does not have the two positioning holes, remove the two pins from the valve body before assembly.

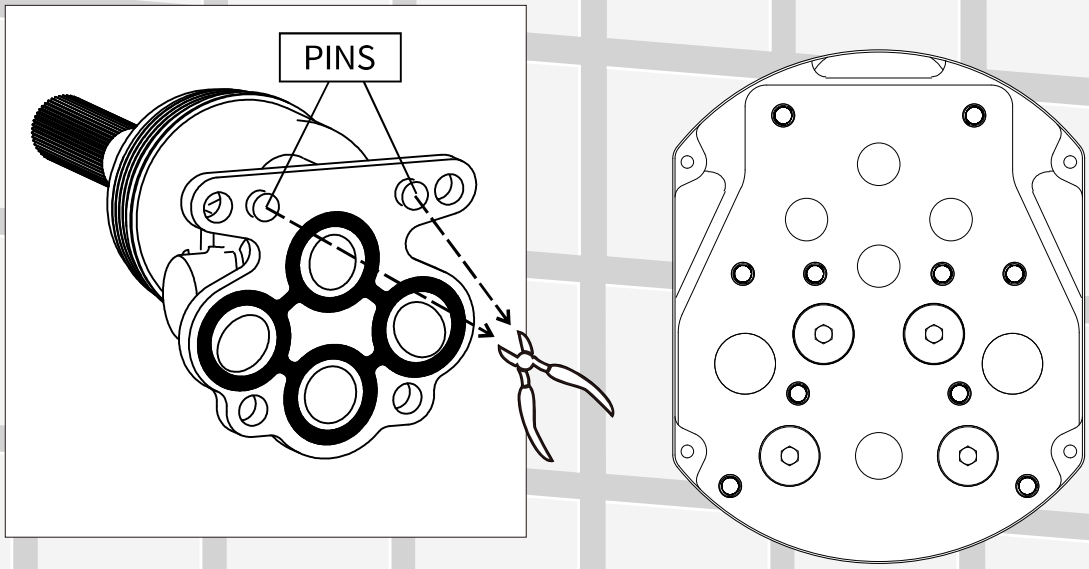

2B

⚠ ATTENTION:

If the base does not have the two positioning holes, remove the two pins from the valve body before assembly.

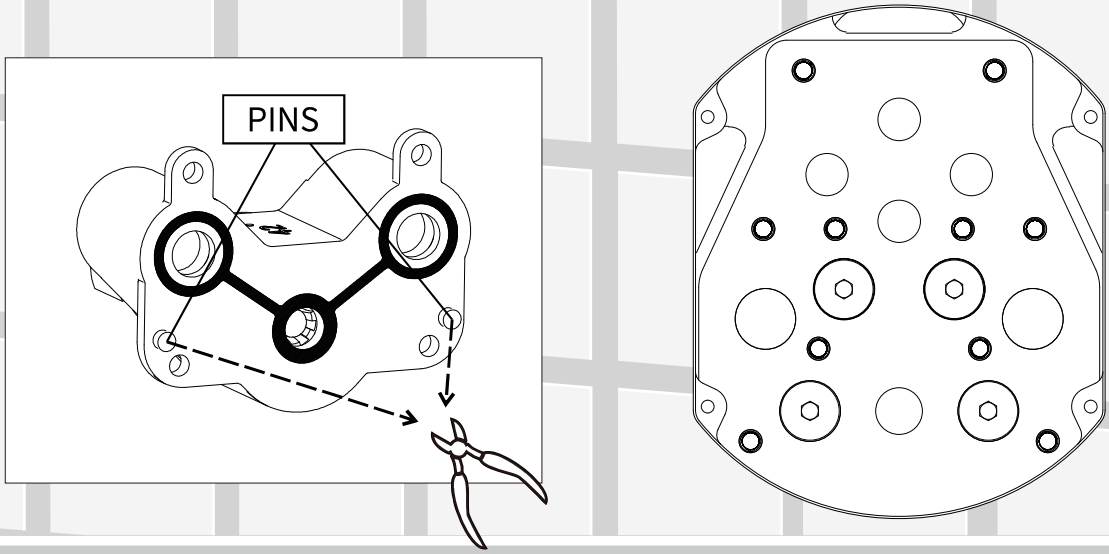

3

⚠ ATTENTION:

In case hot and cold inlets are connected in the wrong way, switch hot and cold check valves.

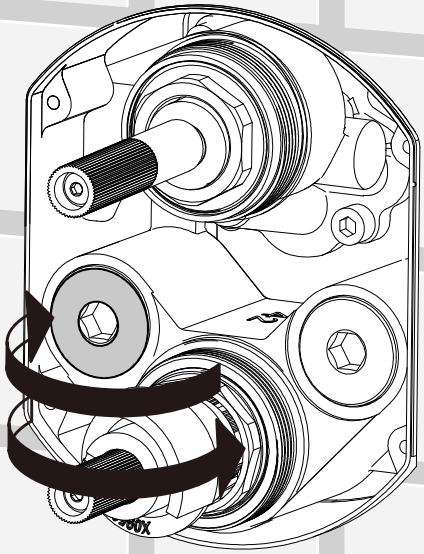

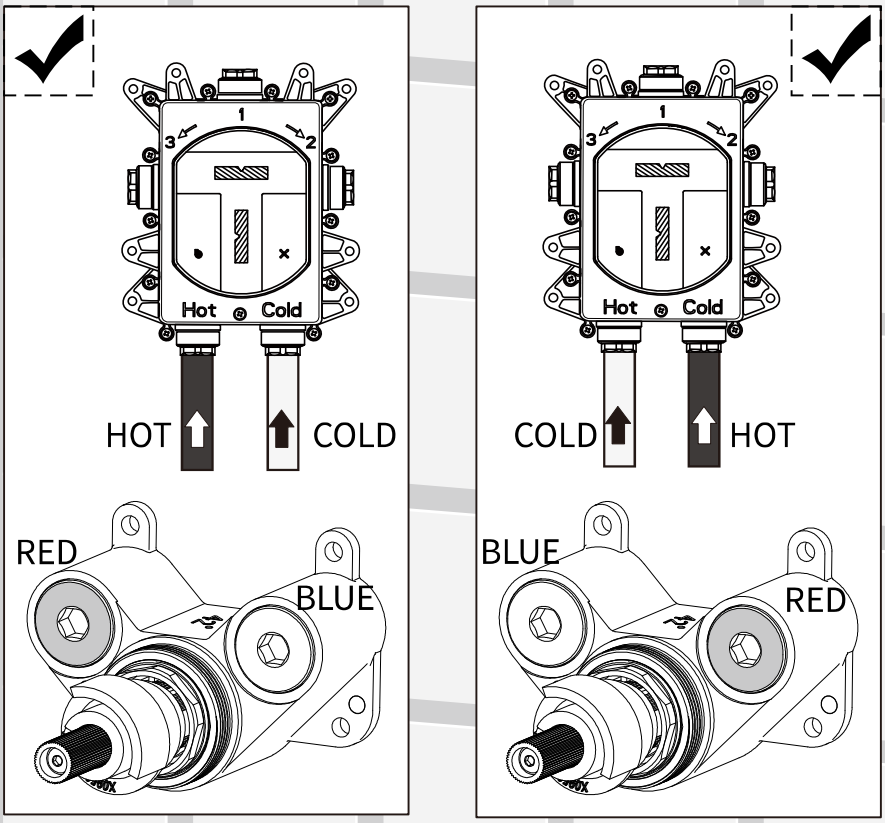

MAINTENANCE FOR CHECK VALVE (LEVER HANDLES)

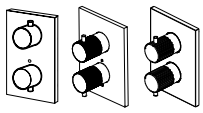

1

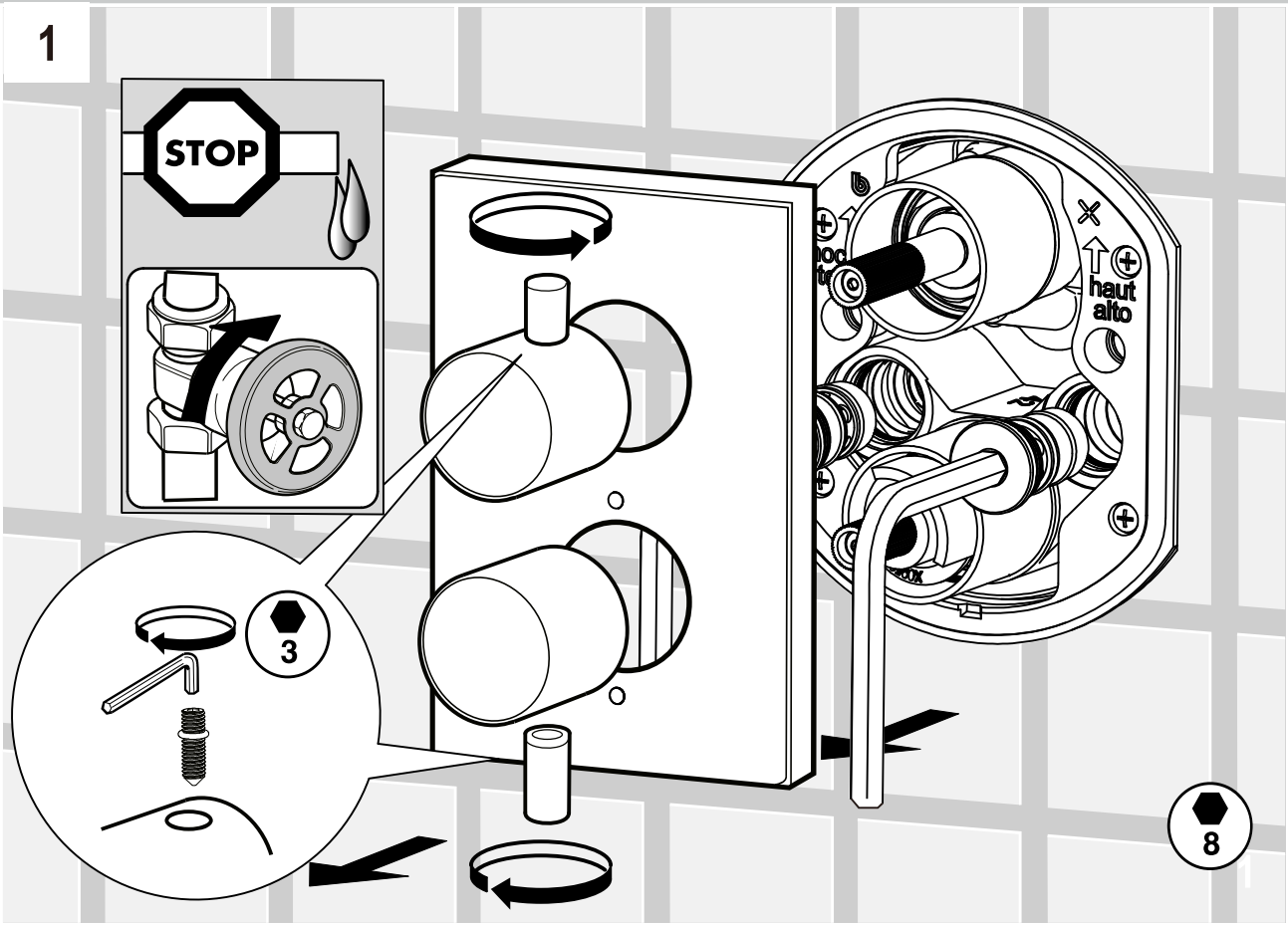

2

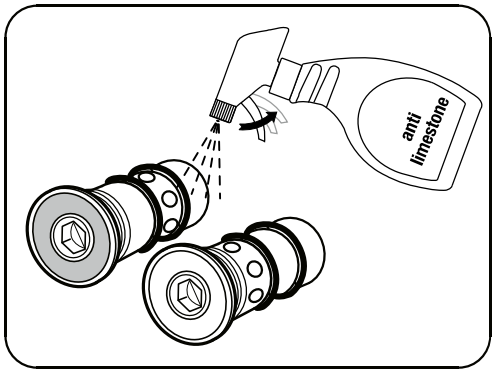

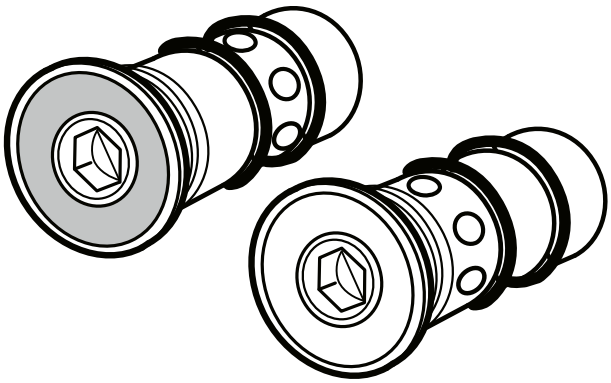

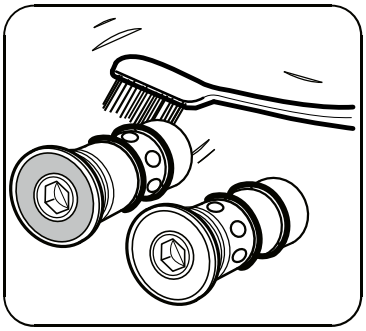

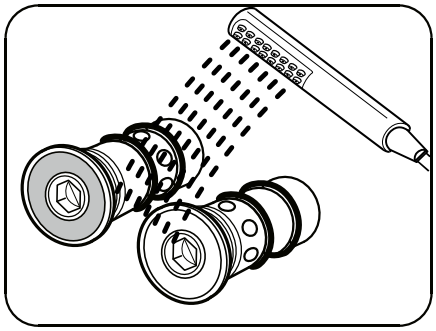

11 MAINTENANCE FOR CHECK VALVE (CROSS HANDLES)

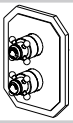

1

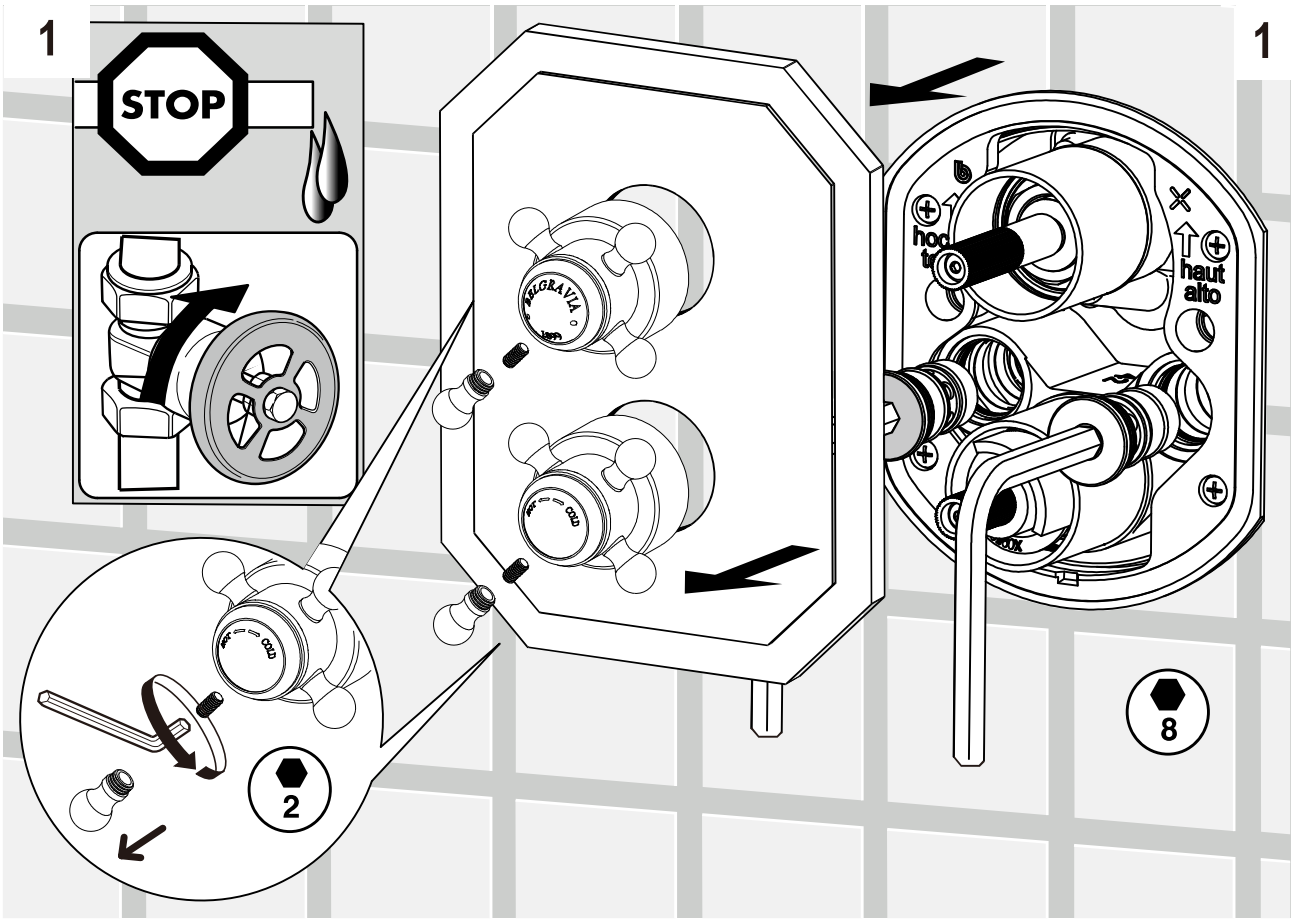
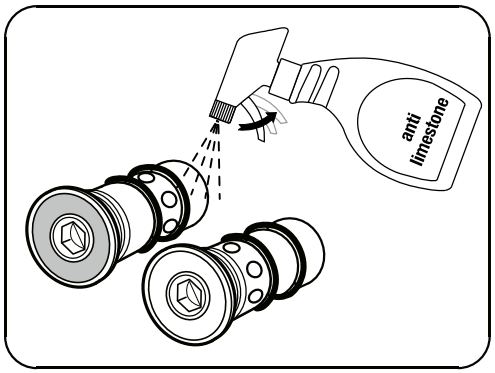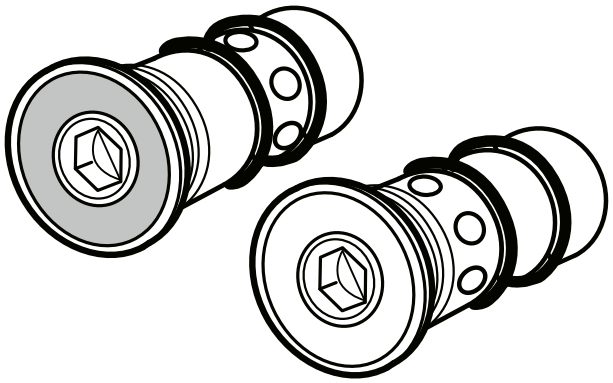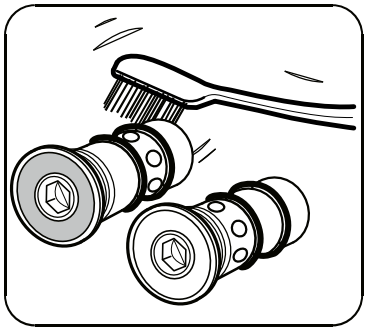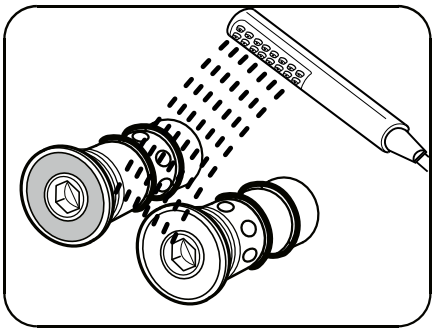
2