MBFW114P+

BASIN MINI MONOBLOC WITH CLICK CLACK WASTE

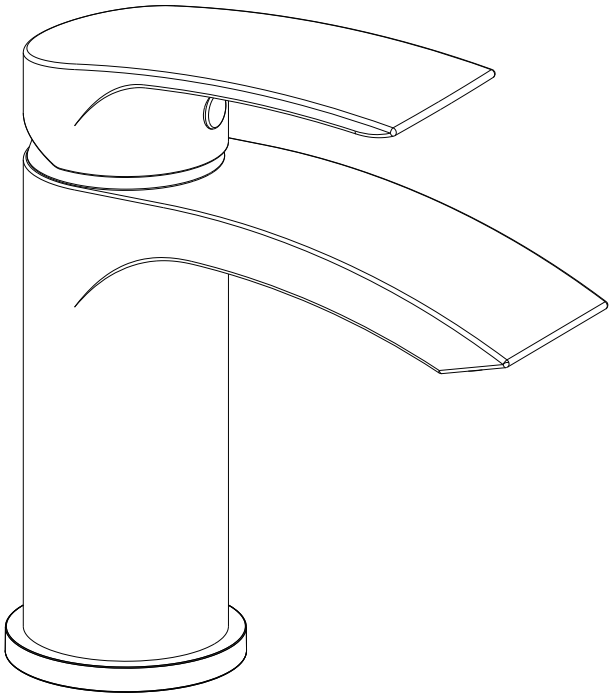

ADORA

INSTRUCTION

Please read these instructions carefully and keep in a safe place for further reference.

General Installation Requirement
The installation must comply with regulations of the Local Water Authority as contained in their bylaws. All of the taps in this range are single flow (the hot and cold water mix in the body) and therefore should be supplied with hot and cold water at balanced pressures. If the taps are not supplied balanced pressures then the mixer will not function correctly. It will also be necessary to fit non-return valves on both the hot and cold feeds. It is very important that all pipework is flushed thoroughly after installation to avoid damaging the ceramic discs.

Minimum/Maximum working pressure
These taps are suitable for high and low pressure installations. They are fitted with single lever cartridges which provide a smooth movement. The minimum work pressure is 0.5bar. The maximum work pressure is 5bar. If the mains pressure is over 5bar, a pressure reducing valve should be fitted.

Approvals
All taps are manufactured using materials tested and approved under the Water Bylaws Scheme and comply with requirements of European standard EN817 where applicable.

Preparations and bylaw requirements
These taps are single flow so the hot and cold water mix in the body. Water Bylaws require that where hot water is supplied from tank and cold from mains, non return valves are fitted on both hot and cold pipes as close as possible to the tap. These are not supplied. Where combination boilers are fitted, it is only necessary to shut off the incoming mains and turn the boiler off and non return valves are not required.

Warning
Before installing the new mixer, it is essential that you thoroughly flush through the supply pipes in order to remove any remaining swarf, solder or other impurities. Failure to carry out this simple procedure could cause problems or damage to the working of the mixer.
These hints are prepared in your guidance; you must exercise due care at all times. We do not accept responsibility for any problems that may occur through incorrect installation.

DIMENSIONS

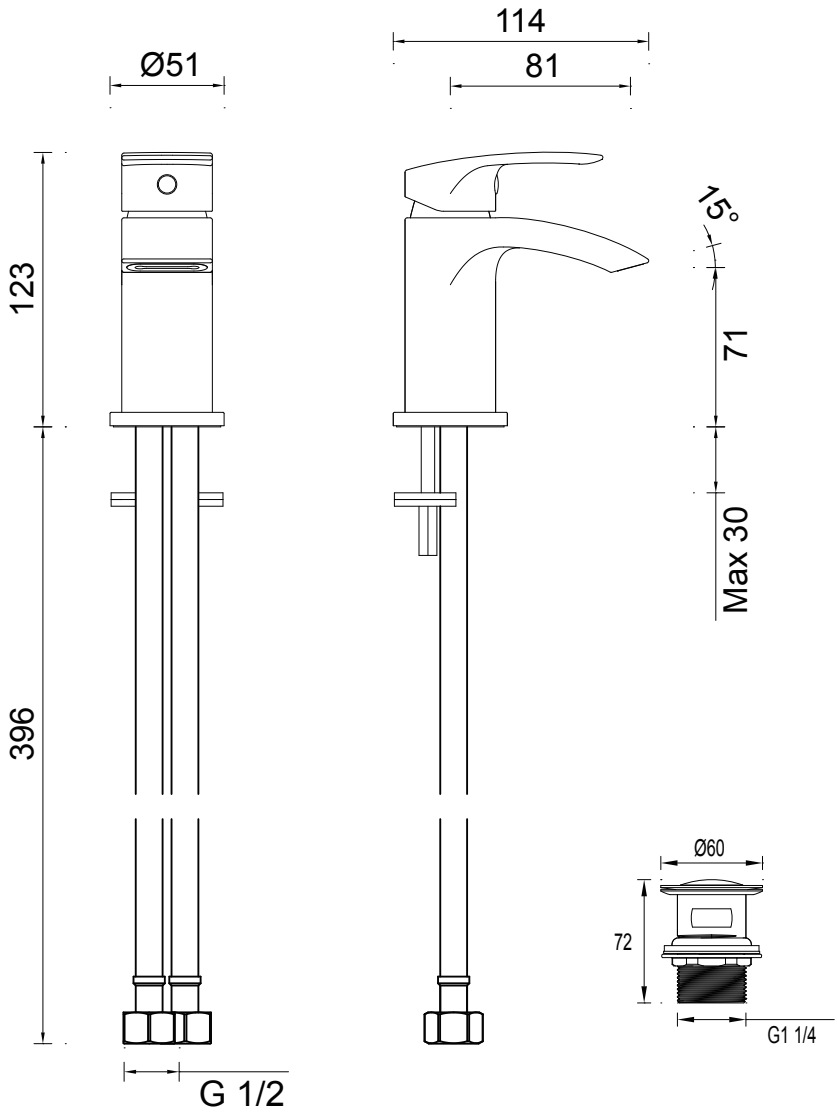

NOTE: ALL DIMENSIONS IN MILLIMETRES

INSTALLATION

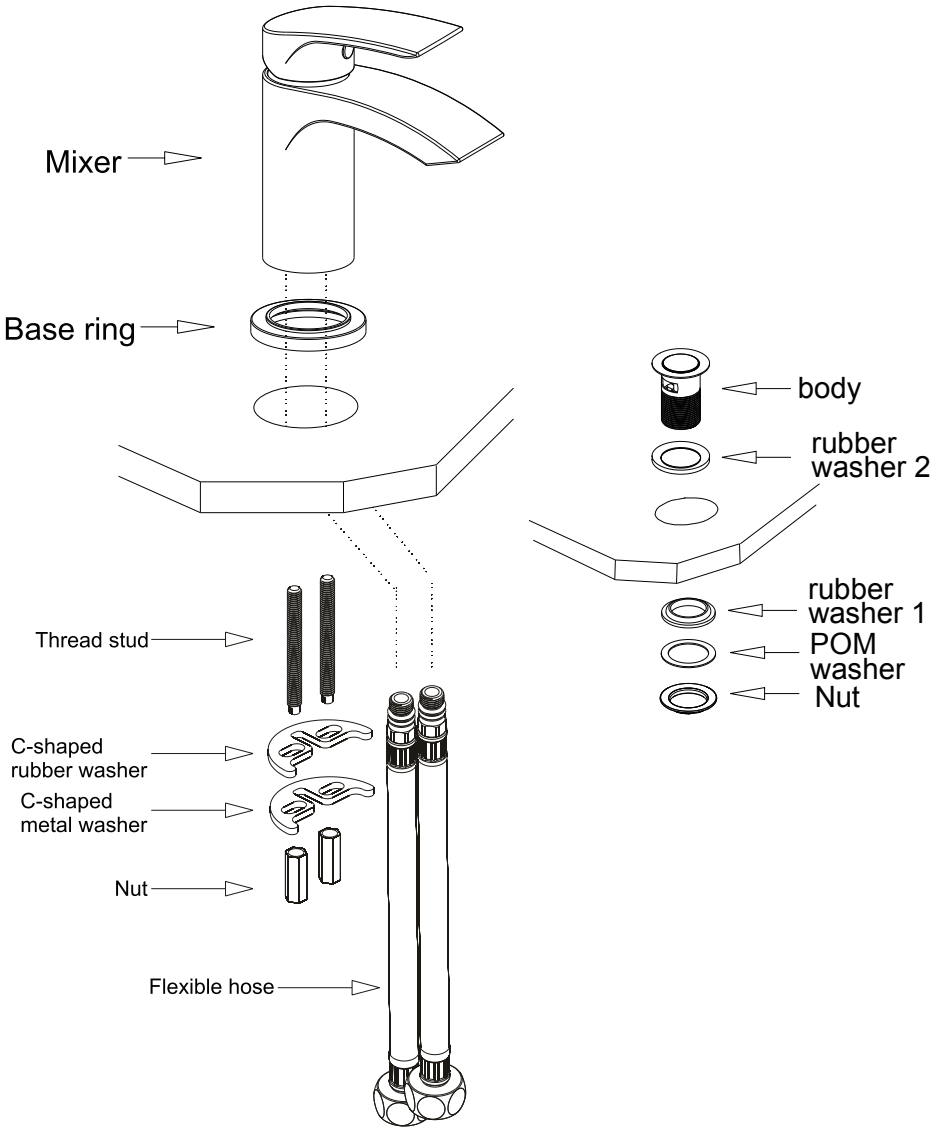

INSTALLATION

First shut off your water heating system, then with your mains stop cock closed, open the lowest cold and hot taps in the house and allow to run until the cold storage tank and pipes are empty (the hot storage cylinder always remains full).
Fitting isolating valve to inlet feeds is recommended for ease of maintenance.

INSTALLATION
Note: Remember to turn off mains water supply before connecting to any existing pipe work.

Screw the thread stud into the mixer body and tighten it fully. If the thread stud has been preinstalled, then unscrew the nut, C-shaped metal washer and then the rubber washer from the thread stud.
Pass the base ring over the thread stud and then seat it under the mixer base.
Screw the flexible hoses into the mixer body, and fully hand tighten. If the flexible hoses have been preinstalled, please move to next step.
Position the mixer onto the basin, and insert the flexible hoses and thread stud through the hole on the basin top.
Slide the C-shaped rubber washer then the C-shaped metal washer over the thread stud, screwing the nut.
Make sure the mixer is correctly positioned, then tighten the nut fully.
Connect water supplies with flexible hoses.

Click Clack Waste Installation

1. Remove the nut, POM washer, rubber washer 1.
2. Insert the body of click clack waste through the basin hole with the rubber washer 2 between the body and the basin.
3. Assemble the rubber washer 1, POM washer back to the thread of body , screw the nut tightly.
4. Open the tap to check and make sure no water leakage through the installed click clack waste.

ATTENTION
Having first checked all new connections, turn on the mains stop cock, close all taps except the new mixer and as system starts to refill, check for leaks. Once you have satisfied yourself that there are no leaks, switch on the water heating.

MAINTENANCE

Cleaning the cartridge
The concealed cartridges should give trouble free service, but in the event of any problem, service is straight forward.

To remove the cartridge
Pull off the decorative cap and then use a suitable hex key (not supplied) to loosen the grub screw, but do not remove it. Pull off the handle and unscrew the cap. Remove the retaining cover using an adjustable spanner (not supplied). Take the cartridge out and wash it with clean running water. Make sure any trapped debris has been removed. Dry and lightly grease the seal (bottom of cartridge, only use silicone grease). Refit the cartridge followed by the retaining cover, cap and handle.

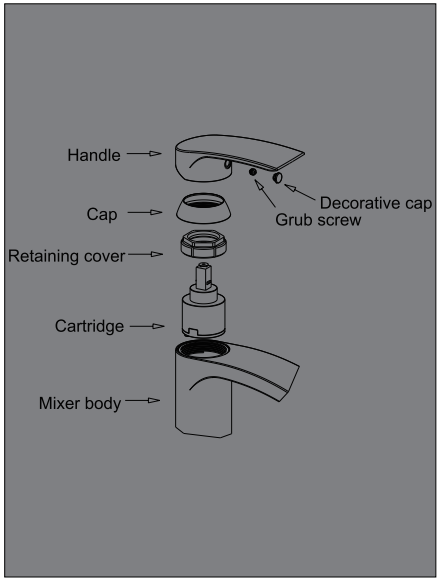

CLEANING

The chrome plate we use on our taps is very durable, nevertheless care should be taken when cleaning. It should be cleaned only with warm soapy water followed by rinsing with clean water and drying with a soft cloth. All finishes are vulnerable to acid attack and some strong substances such as household cleaners, disinfectants, denture cleaners, hair dyes, wine making and photographic chemicals can cause surface to go black or peel.

This product should only be fitted by a qualified plumber to NVQ (National Vocational Qualification) or SNVQ (Scottish National Vocational Qualification) Level 3. Should the installation be completed by a non-qualified person then the guarantee may be considered invalid.

For a claim made under our warranty written certification of your installers credentials can be required. For further information or to find a qualified installer in your area please visit the Institute of Plumbers website - *www.iphe.org.uk*

THE QUALIFICATIONS

At present, to be a plumber you need to follow the National Vocational Qualification (NVQ) route (Scottish National Vocational Qualification - SNVQ - in Scotland). These qualifications are made up of theory and practical work in the classroom/purpose built training facility and work based experience with a working plumber. Colleges should help students find a work placement, although many students organise it themselves.

The S/NVQ qualification works in levels. All recently qualified plumbers should hold S/NVQ Level 2 as basic with Level 3 as the preferred level. Level 2 will give you the foundation you need for a career in plumbing and teach you domestic plumbing to a satisfactory level. Level 3 is more comprehensive and deals with domestic, commercial and industrial plumbing along with aspects such as gas - if you want to one day set up your own business, this is the level to reach. The Institute of Plumbing and Heating Engineering, and the industry as a whole recommends that all plumbers reach a minimum of Level 3.

Reaching Level 3 has other advantages. The Institute runs a Master Plumber Certificate, which only those attaining Level 3 or equivalent can reach as long as they have the relevant experience as well. Those with S/NVQ Level 3 can (once in membership with the Institute for five years as a Member MIPHE) gain Engineering Technician EngTech status with the Engineering Council (UK).

For any further information please email
technical@adora-bathrooms.co.uk

Or visit our web-site at www.adora-bathrooms.co.uk

The manufacturer reserves the right to make technical modifications without prior notice.