crosswater

THERMO SHOWER VALVE no Levers & Backplate

WLBP1000RC_V2

This product should only be fitted by a qualified plumber to NVQ (National Vocational Qualification) or SNVQ (Scottish National Vocational Qualification) Level 3. Should the installation be completed by a non-qualified person then the guarantee may be considered invalid.

For a claim made under our warranty written certification of your installers credentials can be required. For further information or to find a qualified installer in your area please visit the Institute of Plumbers website - *www.iphe.org.uk*

THE QUALIFICATIONS

At present, to be a plumber you need to follow the National Vocational Qualification (NVQ) route (Scottish National Vocational Qualification - SNVQ - in Scotland). These qualifications are made up of theory and practical work in the classroom/purpose built training facility and work based experience with a working plumber. Colleges should help students find a work placement, although many students organise it themselves.

The S/NVQ qualification works in levels. All recently qualified plumbers should hold S/NVQ Level 2 as basic with Level 3 as the preferred level. Level 2 will give you the foundation you need for a career in plumbing and teach you domestic plumbing to a satisfactory level. Level 3 is more comprehensive and deals with domestic, commercial and industrial plumbing along with aspects such as gas - if you want to one day set up your own business, this is the level to reach. The Institute of Plumbing and Heating Engineering, and the industry as a whole recommends that all plumbers reach a minimum of Level 3.

Reaching Level 3 has other advantages. The Institute runs a Master Plumber Certificate, which only those attaining Level 3 or equivalent can reach as long as they have the relevant experience as well. Those with S/NVQ Level 3 can (once in membership with the Institute for five years as a Member MIPHE) gain Engineering Technician EngTech status with the Engineering Council (UK).

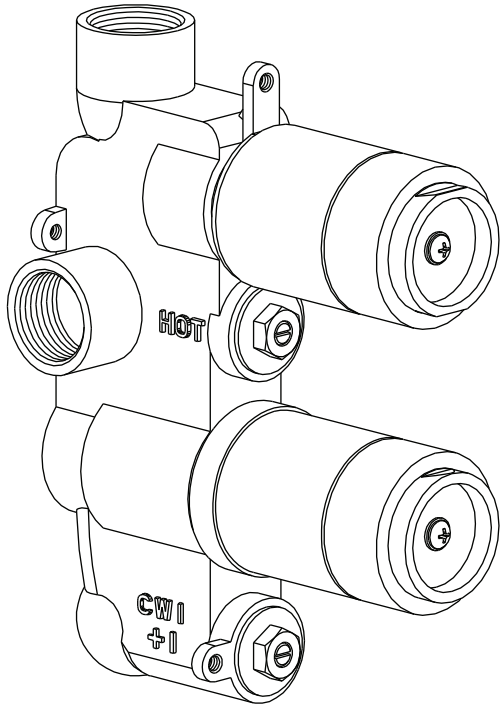

For any further information please contact Crosswater on: **0845 873 8840**

Or visit our web-site at www.crosswater.co.uk

The manufacturer reserves the right to make technical modifications without prior notice.

INSTALLATION INSTRUCTIONS

crosswater

3065-0493-1-00 C3

INTRODUCTION

This thermostatic valve is suitable for use with all water systems up to a maximum operating pressure of 5.0 bar and static pressure of 10 bar.(beyond which pressure reducing valves must be fitted).

The outlet is controlled by a flow control cartridge, commonly used for a main shower head.

PARTS IDENTIFICATION

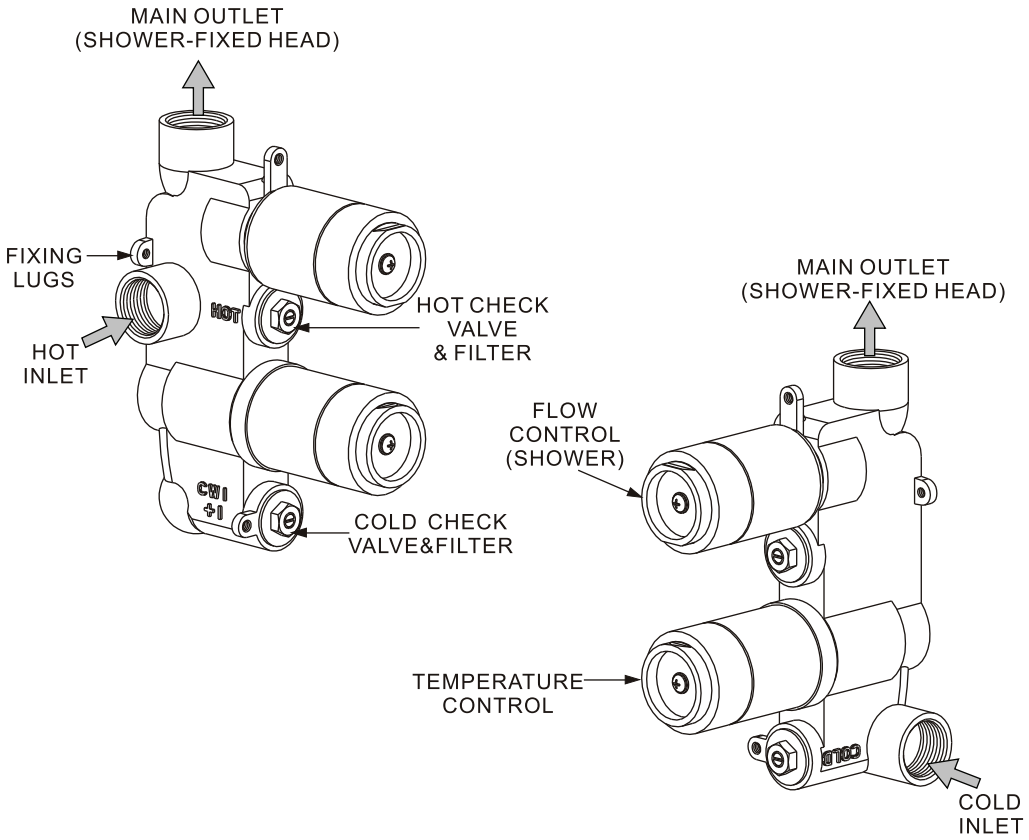

NOTE: FOR ILLUSTRATIVE PURPOSES HANDLES ARE NOT SHOWN

DIMENSIONS

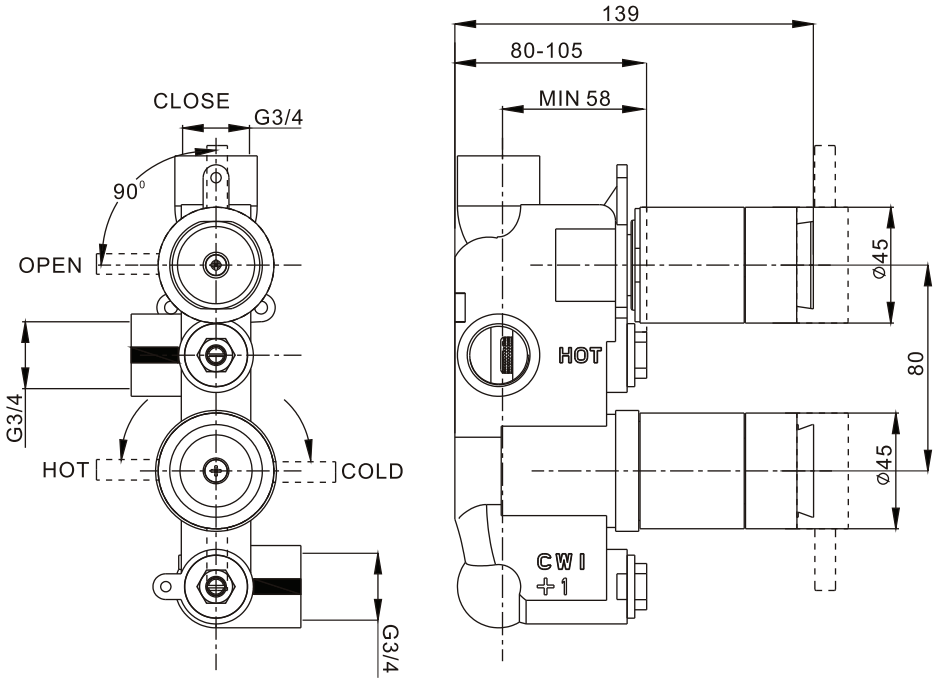

TMV APPROVED INSTALLATIONS

Where valves are required to be installed in accordance with Type 2 TMV requirements please install them strictly in accordance with the instructions on pages 7-13 of this manual.

NOTE: ALL DIMENSIONS IN MILLIMETRES

INSTALLATION

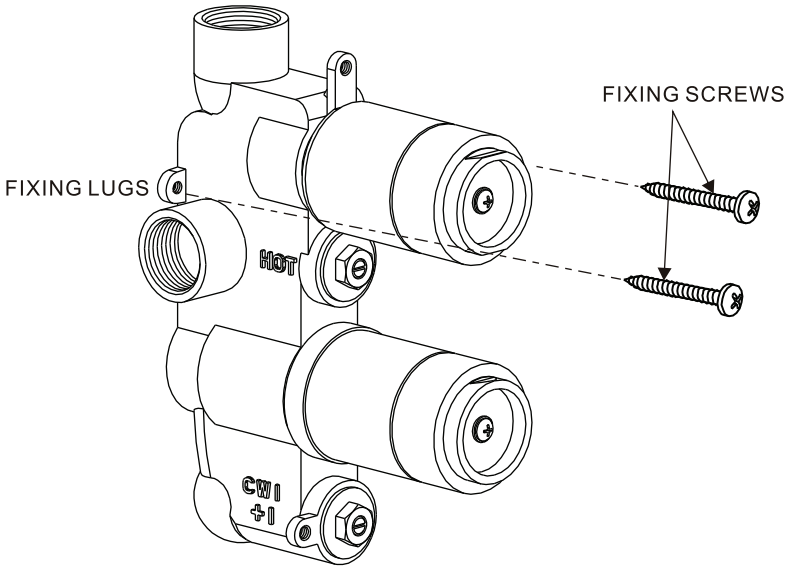

NB. Cover plate shown for illustration purposes only. It is supplied separately various styles available.

For all Water square (WS prefix) please additional installation instruction before completing any of the tiling.

FIG. 1 FITTING PLASTIC DUST COVER

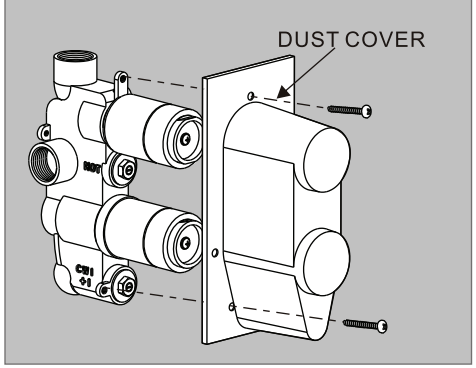

FIG. 2 FITTING CONTROL HANDLES

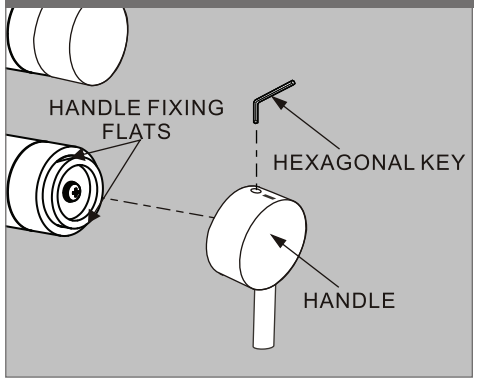

INSTALLATION

NOTES:

Please read these instructions carefully and keep in a safe place for future reference.
The installation must comply with all Local/National Water Supply Authority Regulations/Bye laws and Building and Plumbing Regulations (UK: BS8558).
This valve is a mixing device and therefore requires the water supplies to be reasonably balanced, otherwise we recommend a pressure reducing valve to be fitted.
The valve is fitted with integral WRAS approved single check valves cartridges which command the water supply, therefore the thermostatic valve is protected against cross-flow due to unbalanced line pressures as required by the Water Supply (Water Fittings) Byelaws 1999.
Fitting isolating valves to the inlet feeds is recommended for ease of maintenance.

INSTALLATION

⚠ **Remember to turn off the mains water supply before connecting to any existing pipe work.**
Warning! Please check for any hidden pipes and cables before drilling holes in the wall.

Position the valve onto the wall and mark the position of the fixing lugs (x4). Make sure the valve is set back from the front face of the wall by the appropriate depth to allow for plasterboard, filling and tiling etc. (min. 78mm to max. 105mm see dimension page).
Mount casting to the wall using suitable fixings.
Always leave access to the four front cartridges for servicing.
Once the valve has been secured to the wall, the black Plastic Dust Cover can be temporally attached to the valve with the screws supplied. This will protect the valve while the rest of the work is completed **(see fig 1)**.

⚠ **Do not use tapered threaded adaptors or excessive thickness of sealing tape as this may damage the valve body and result in a concealed leak within the wall cavity.**

Blank off and seal the open outlet if it is not required.
Remove the Plastic Dust Cover.

⚠ **Turn on supplies and test all connections for water tightness.**
Remove Hot and Cold check valves, and flush out the installation, clean the filters and refit.
Apply a narrow bead of clear silicone sealant around the back edge of the cover plate and carefully press into position.
Fit the control knobs by lining up the flat surface of the valve cover with the grub screw on the handle, tighten the screw with the supplied hexagonal key **(see fig 2)**.

TEMPERATURE SETTING

To set the temperature, remove the handle and unscrew the centre screw of the thermostatic control cover. Rotate the exposed thermostatic spindle (clockwise for cold, and anti-clockwise for hot) until the maximum desired showering temperature is set (42^{0}C-suggested maximum "pre-set" temperature).
Then line up the screw head on the back of the thermostatic control cover with the stop on the cartridge. Push the control cover onto the splines and tighten the centre screw, refit the handle. The thermostat is now set to its new temperature and can only be increased or decreased by repeating this process.

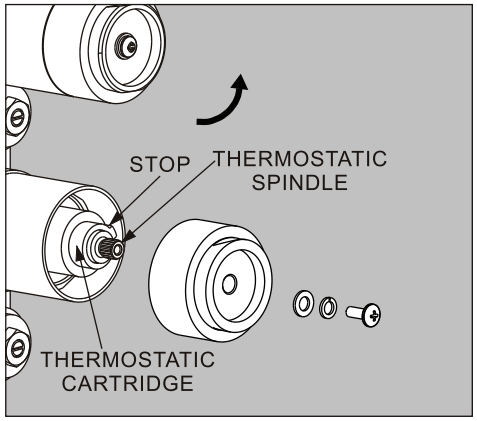

MAINTENANCE

Note: To avoid damage, please remove all chrome parts before any maintenance takes place.

THERMOSTATIC CARTRIDGES
The 1" concealed thermostatic valve should give trouble free service, but in the event of failure, servicing is straight forward.

To remove the thermostatic cartridge.
Undo the cartridge clamp nut (take note of the orientation of the cartridge) and pull the cartridge out using the temperature control knob to aid removal. Wash the cartridge with clean running water and make sure that any trapped debris has been removed. Dry and lightly grease the seals (only use silicone grease) and replace the cartridge making sure that as before the recess on the body of the valve is aligned with the slot in the raised central section of the plastic cartridge. This is to make sure the lug on the shroud is in the required 2 o'clock position as shown.

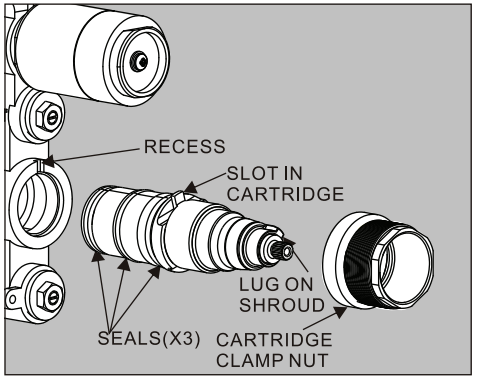

FLOW CONTROL CARTRIDGE
The Flow Control Cartridge uses ceramic discs which normally last indefinitely unless debris manages to get between them. Wash the cartridge with clean running water, dry and lightly grease the seal.

MAINTENANCE

FILTERS/CHECK VALVES
The check valves stop cross flow between the hot and cold supplies.

To clean the Check Valves.
Undo and remove the Check valve.Using a pair of pliers remove the Non return valve and filter. Wash the filter with clean running water, dry and lightly grease the seals.

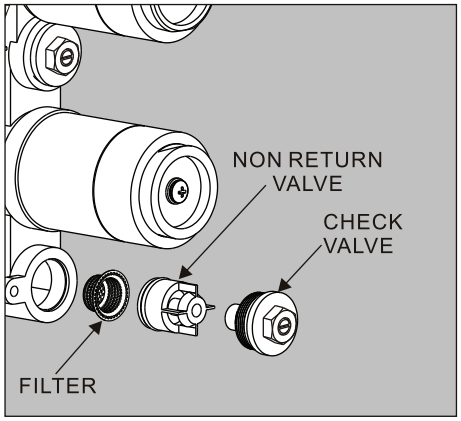

CARE OF YOUR SHOWER VALVE
We recommend cleaning the valve with a soft damp cloth.
We strongly advise against the use of ALL cleaning products.

TROUBLE SHOOTING

SYMPTOM	SOLUTION
After installation the shower runs HOT or COLD and will not mix.	Hot and cold supplies are plumbed the wrong way round. The hot and cold supplies need to be redone to the correct inlets as marked and described in the installation instruction.
Shower will not run hot enough when first installed.	Maximum temperature needs adjusting, see'temperature setting'.
Cold water tracking through the valve into the hot water system.	Check and clean the check valve cartridges and filters located under the check valves.
Very low flow or no flow (gravity).	Check hot and cold feeds (the valve will shut down if either the hot or cold supply fails).

Thermostatic Mixing Valves Maintenance & Installation Instructions for Compliance of the Kiwa Type 2

Operating Conditions of Use.

Before installation the on site service or conditions of use must be checked. The table below contains details of the Requirements for operation. If your water supply cannot meet these conditions then the valve cannot be guaranteed to operate as a Type 2 valve.

Valves cannot operate effectively where a hot or cold pressure system crosses the boundaries of the two ranges. In the case where operating conditions such as these exist; either the hot or cold pressure will require to be reduced or boosted so as to be within a selected range.

Dynamic operating flow pressure above 5 bar will require the installation of a pressure reducing valve.

Operating conditions of use pressure/temperature, hot & cold. (Table 1 from 1111)

	High Pressure
Maximum Static Pressure Bar	10
Flow Pressure, Hot & Cold - Bar	0.5 to 5
Hot Supply Temperature - °C	55 to 65
Cold Supply Temperature - °C	Equal to or Less than 25°

NOTE: valves operating outside these conditions of use cannot be guaranteed to operate as Type 2 valves

Designation of use HP-S

If water supply is fed by gravity then supply pressure should be verified to ensure the conditions of use are appropriate

Recommended outlet temperatures

The Kiwa Type 2 approval Scheme recommends the following set maximum mixed water outlet temperatures for use in all premises:44or 46°C for bath fill. 41°C for showers.41°C for washbasins. 38°C for bidets.

It is not a safe bathing temperature for adults or children.

The British Burns Association recommends 37 to 37. 5°C as a comfortable bathing temperature for children. In premises covered by the Care Standards Act 2000, the maximum mixed water outlet temperature is 43°C.

Table 2: Mixed Water Temperature	Mixed Water Temperature °C (at point of discharge)
Shower	41 Max

Valve Installation

The thermostatic mixing valve will be installed in such a position that maintenance of the TMV and its valves and the commissioning and testing of the TMV can be undertaken.

- The fitting of isolation valves is required as close as is practicable to the water supply inlets of the thermostatic mixing valve.
- The fitting of strainers is recommended as close as is practicable to the water supply inlets of the thermostatic mixing valve.

The installation of thermostatic mixing valves must comply with the requirements of the Water Supply（Water Fittings）Regulations 1999.

Commissioning and Testing

Commissioning notes for Thermostatic Mixing Valves.

The first step in commissioning a thermostatic mixing valve is to check the following:
The designation of the thermostatic mixing valve matches the application.
The supply pressures are within the valves operating range.
The supply temperatures are within the valves operating range.
Isolating valves (and strainers preferred) are provided.

If all these conditions are met, proceed to set the temperature as stipulated in the manufacturer installation instructions.

The mixed water temperature at the terminal fitting must never exceed 46°C.

It is a requirement that all Type 2 valves shall be verified against the original set temperature results once a year. When commissioning/testing is due the following performance checks shall be carried out.

Measure the mixed water temperature at the outlet.
Carry out the cold-water supply isolation test by isolating the cold-water supply to the TMV, wait for five seconds if water is still flowing check that the temperature is below 46°C.
If there is no significant change to the set outlet temperature (±2°C or less change from the original settings) and the fail-safe shut off is functioning, then the valve is working correctly, and no further service work is required.

Notes
If there is a residual flow during the commissioning or the annual verification (cold water supply isolation test), then this is acceptable providing the temperature of the water seeping from the valve is no more than 2ºC above the designated maximum mixed water outlet temperature setting of the valve.
Temperature readings should be taken at the normal flow rate after allowing for the system to stabilise.
The sensing part of the thermometer probe must be fully submerged in the water that is to be tested.
Any TMV that has been adjusted or serviced must be re-commissioned and re-tested in accordance with the manufacturers' instructions.

Testing Method
The valve should be tested to ensure correct operation at commissioning and thereafter at stated intervals decided by the user but never at greater than 12 monthly intervals.

The testing will only require a normal thermometer with a scale greater than 65°C. The temperature sensitive element of the thermometer should always be fully inserted into the water flow.
Measure the mixed water temperature. Carry out a cold fail/safe shut-off test by using the isolation valve to shut off the water to the cold supply.
Wait 5 seconds, if water is still flowing check that the water temperature is below 46°C. The flow should stop or reduce to a trickle. Open cold water isolation valve and measure mixed water temperature.

If there is no significant change from the original settings and fail/safe shut off is functioning the valve is working correctly and no further service is required.
If the outlet temperature has drifted by more than 2°C, or if the fail/safe function does not work, a full service or re-commissioning is required.

The manufacturer of this valve recommends that in these circumstances you contact him for advice as servicing should only be undertaken by competent persons.

If there is a residual flow during the commissioning or the annual verification (cold water supply isolation test), then this is acceptable providing the temperature of the water seeping from the valve is no more than 2°C above the designated maximum mixed water outlet temperature setting of the valve.

Water Supply (Water Fittings) Regulations 1999

This valve complies with the requirements of the above Regulations and installation should be carried out in strict compliance with them.

Aftercare

Crosswater thermostatic shower valves should be treated with care.
Do not use abrasive cleaners as this may cause damage. An occasional wipe with a soft damp cloth followed by a thorough rinsing is all that is required.

ATTENTION

If the collar is going to be changed then the number should be noted and kept safe as it will be required should you need to contact us in the future.

