INSTALLATION INSTRUCTIONS

Shallow P Trap - CW3

P Trap - CW3CW

Important

- We recommend that this product is installed by a qualified professional contractor. Such as a plumber who is certified by NVQ (National Vocational Qualification) or SNVQ (Scottish National Vocational Qualification) Level 3.
- Please check this product immediately to ensure that it has not been damaged and is complete. Before installation, please make sure this product is the correct model and you have all the parts required for installation and using.
- Please read these instructions carefully and keep it for future reference.
- To aid with installation two washers have been provided, please only use the fibre OR rubber washer depending on the type of connection.

Installation

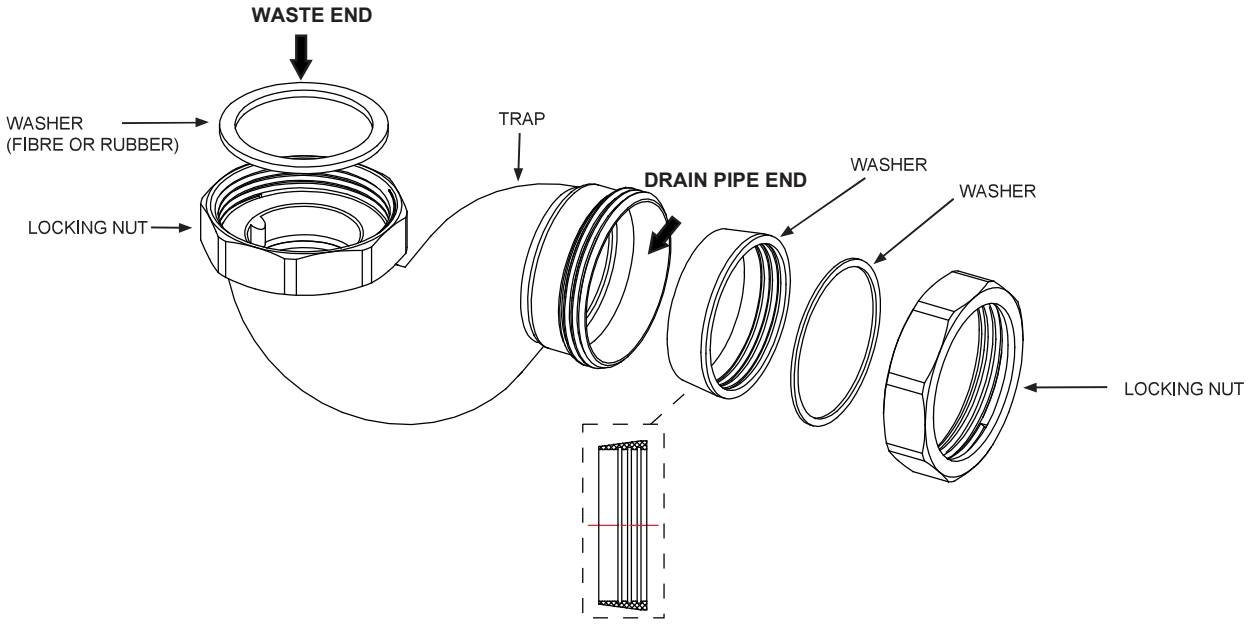

Dimension

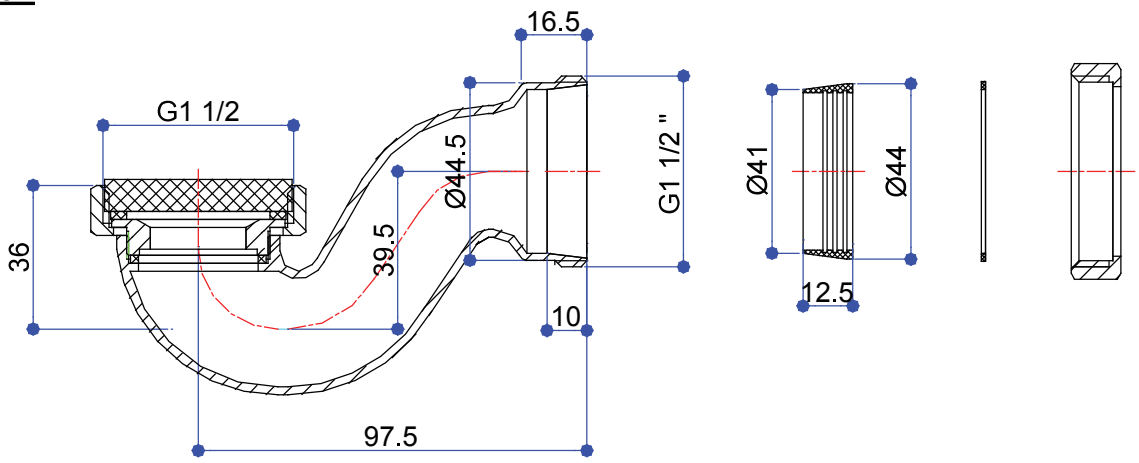

Maintenance

We do NOT recommend you use any household cleaners to clean the product. Because these cleaners change substance or formula too frequently. The product should be always cleaned only with soapy water and rinsed with clean water and dried with a soft cloth.