WASTE

Basin Click Clack Ceramic White

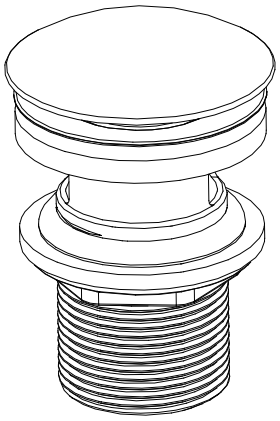

Basin Click Clack (Slotted)

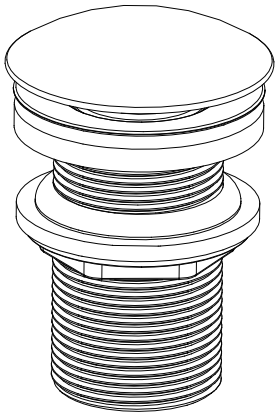

Basin Click Clack (Unslotted)

PRODUCT CODES:

BSW0103GW_V3 BB_BSW0103GW_V3
BSW0101GW_V3 BB_BSW0101GW_V3

IMPORTANT INFORMATION BEFORE YOU START

Please read carefully and keep this information for further reference.

Thank you for buying a Bathroombrands Product. To ensure that it works to its full potential, it needs to be ftted correctly.

Check the contents of the pack carefully before installation.

Bathroombrands will not be held responsible for any de-fit/ re-fit costs where faulty product has been ftted. If any fault is found with materials or workmanship, it must be reported immediately to the manufacturer. Remedial action will be taken, based on information received, on condition that:

1. Full details are supplied to the manufacturer.
2. The product has not been modified or tampered with;
3. The manufacturer is informed of any damage/shortages prior to installation.
4. The product has not been installed, or attempts have been made to install.

We do not accept responsibility for any problems that may occur through incorrect installation. This product should only be installed by a suitably qualified plumber/installer. Should the installation be completed by a non-qualified person any product guarantee maybe considered invalid. For a claim made under our warranty, written certification of your installer's qualifications may be required.

DIMENSION

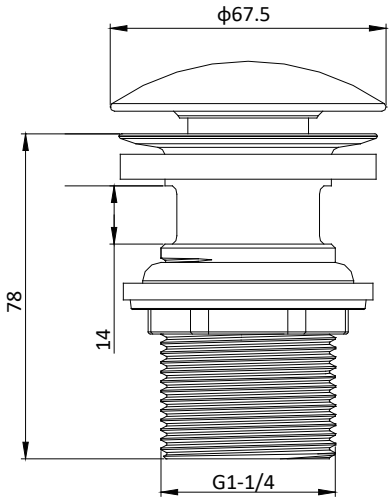

Basin Click Clack (Slotted)

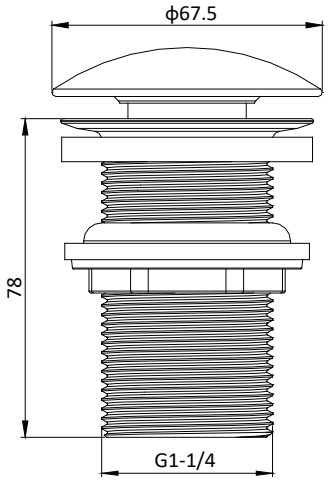

Basin Click Clack (Unslotted)

NOTE:ALL DIMENSIONS IN MILLIMETRES

BEFORE YOU START

Important Pre-Installation Notes

Remove all packaging and check the fitting for damage before starting installation.

BEFORE YOU START

Important Pre-Installation Notes

Remove all packaging and check the fitting for damage before starting installation.

Warning: Before starting any installation please consider the following: before drilling into walls, check that there are no hidden electrical wires, cables or wate supply pipes. This can be checked with the aid of an electronic detector.

If power tools are used do not forget to: -

Wear eye protection

Unplug equipment after use

Important:

Remember to turn off the mains water supply before connecting to any existing pipe work. Fitting isolating valves to the inlet feeds is recommended for ease of maintenance.

Warning: Before installing the new fitting it is essential that you thoroughly flush through the pipework in order to remove any remaining swarf, solder, etc. Failure to carry out this procedure could cause problems or damage to the workings of the fitting.

Take care when handling the 'flexible connecting pipes', do not bend, twist or crush them. Only tighten the pipes by hand. Do not crush or kink the shower hose, this could damage the hose and cause leaks.

INSTALLATION

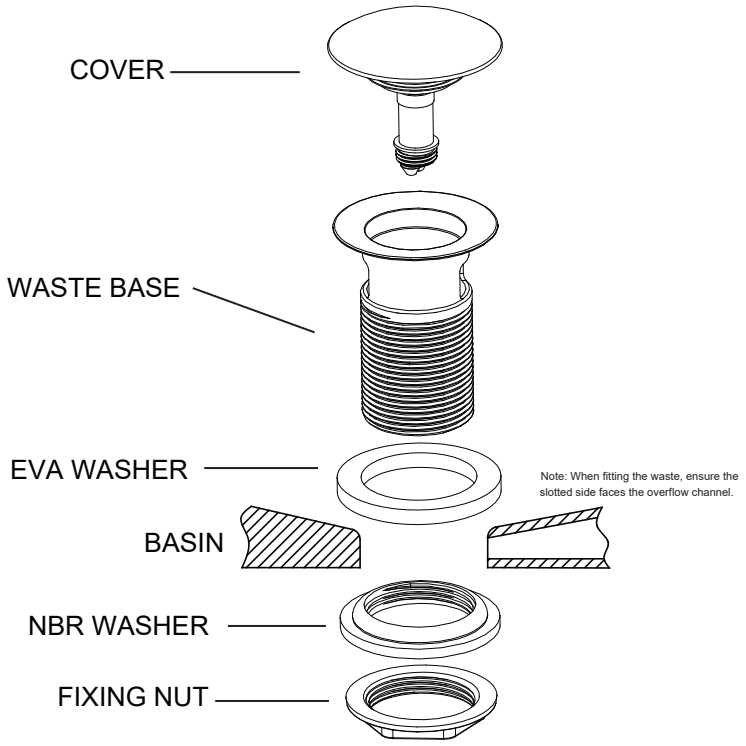

Basin Click Clack (Slotted)

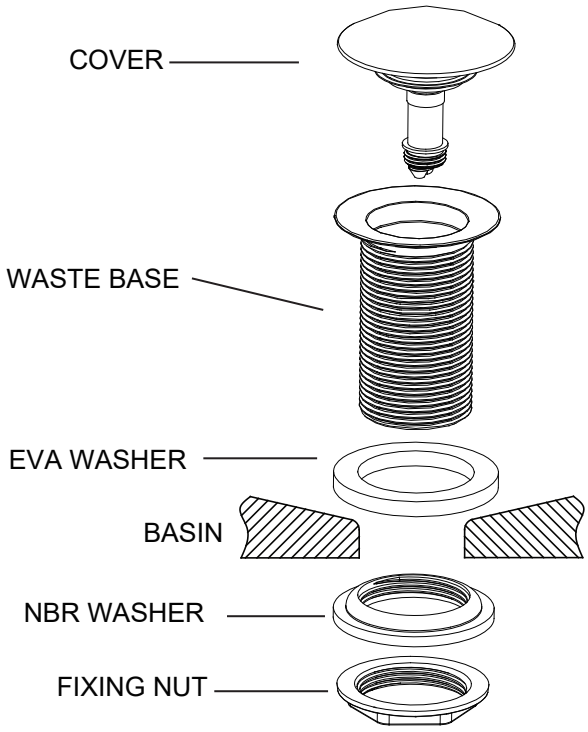

Basin Click Clack (Unslotted)

CARE & MAINTENANCE

The material we use in our accessories is very durable, nevertheless care should be taken when cleaning them. They should be cleaned only with warm soapy water followed by rinsing with clean water and drying with a soft cloth. All finishes are vulnerable to acid attack and some strong substances such as household cleaners, disinfectants, denture cleaners, hair dyes, wine making, and photographic chemicals can cause the surface to go black or peel.

Note: Never use abrasive detergents or disinfectants or those containing alcohol, hydrochloric acid or phosphoric acid.

Partofthe
Bathroom Brands Group

We reserve the right to make technical modifications without prior notice.

Lake View House Rennie Drive,
Dartford Kent DA1 5FU
United Kingdom
0345 873 8840
www.bathroombrands.com