crosswater

Wisp Mini Basin Mixer

WP114DN

This product should only be fitted by a qualified plumber to NVQ (National Vocational Qualification) or SNVQ (Scottish National Vocational Qualification) Level 3. Should the installation be completed by a non-qualified person then the guarantee may be considered invalid.

For a claim made under our warranty written certification of your installers credentials can be required. For further information or to find a qualified installer in your area please visit the Institute of Plumbers website - *www.iphe.org.uk*

THE QUALIFICATIONS

At present, to be a plumber you need to follow the National Vocational Qualification (NVQ) route (Scottish National Vocational Qualification - SNVQ - in Scotland). These qualifications are made up of theory and practical work in the classroom/purpose built training facility and work based experience with a working plumber. Colleges should help students find a work placement, although many students organise it themselves.

The S/NVQ qualification works in levels. All recently qualified plumbers should hold S/NVQ Level 2 as basic with Level 3 as the preferred level. Level 2 will give you the foundation you need for a career in plumbing and teach you domestic plumbing to a satisfactory level. Level 3 is more comprehensive and deals with domestic, commercial and industrial plumbing along with aspects such as gas - if you want to one day set up your own business, this is the level to reach. The Institute of Plumbing and Heating Engineering, and the industry as a whole recommends that all plumbers reach a minimum of Level 3.

Reaching Level 3 has other advantages. The Institute runs a Master Plumber Certificate, which only those attaining Level 3 or equivalent can reach as long as they have the relevant experience as well. Those with S/NVQ Level 3 can (once in membership with the Institute for five years as a Member MIPHE) gain Engineering Technician EngTech status with the Engineering Council (UK).

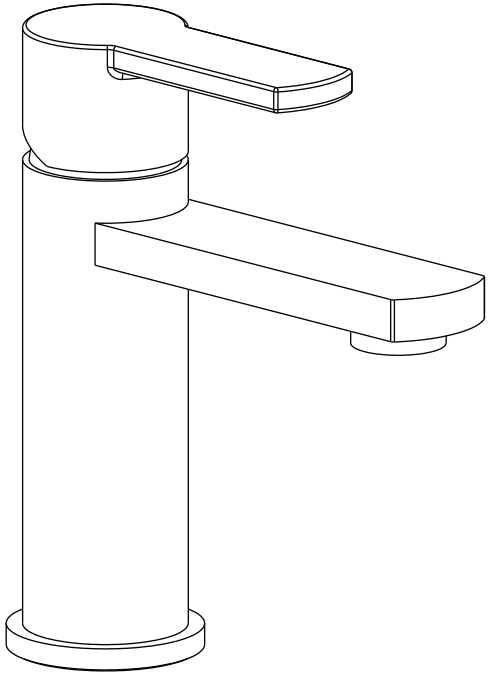

For any further information please contact Crosswater on: **0845 873 8840**

Or visit our web-site at www.crosswater.co.uk

The manufacturer reserves the right to make technical modifications without prior notice.

INSTALLATION INSTRUCTIONS

crosswater

P5-10975660-E A/0

INTRODUCTION

Please read these instructions carefully and keep in a safe place for future reference.

General Installation Requirements.

The installation must comply with regulations of the Local Water Authority as contained in their bylaws. All of the taps in this range are single flow (the hot and cold water mix in the body) and should therefore be supplied with hot and cold water at balanced pressures, both from the tank or both from the mains (via a combination boiler for example). If the taps are not supplied at balanced pressures then the mixer will not function correctly. It will also be necessary to fit non-return valves on both hot and cold feeds.It is very important that all pipework is flushed thoroughly after installation to avoid damaging the ceramic discs.

Minimum/Maximum working pressure

These taps are suitable for high and low pressure installations They are fitted with a half turn ceramic disc cartridge which provides a good flow rate with very smooth movement. To ensure that the mixer works adequately under low pressure, the cold water storage tank should be at least 2 metres above the highest installed position. The maximum water pressure is 6 bar (note: mains cold water is normally supplied at between 2 and 3bar). For installations where the mains pressure exceeds 6 bar a pressure reducing valve should be fitted.

Approvals

All products are manufactured using materials tested and approved under the Water Bylaws Scheme and comply with requirements of British Standard 5412:1996 where applicable.

Preparation and byelaw requirements

These taps are single flow so the hot and cold water mix in the body. Water byelaws require that where the hot water is supplied from a tank and cold from the mains, non return valves are fitted on both hot and cold pipes as close as possible to the tap. These are not supplied. Where combination boilers are fitted it is only necessary to shut off the incoming mains and turn the boiler off and non return valves are not required.

WARNING

Before installing the new mixer it is essential that you thoroughly flush through the supply pipes in order to remove any remaining swarf, solder or other impurities. Failure to carry out this simple procedure could cause problems or damage to the working of the mixer.

These hints have been prepared for your guidance, you must exercise due care at all times. We do not accept responsibility for any problems that may occur through incorrect installation.

DIMENSIONS

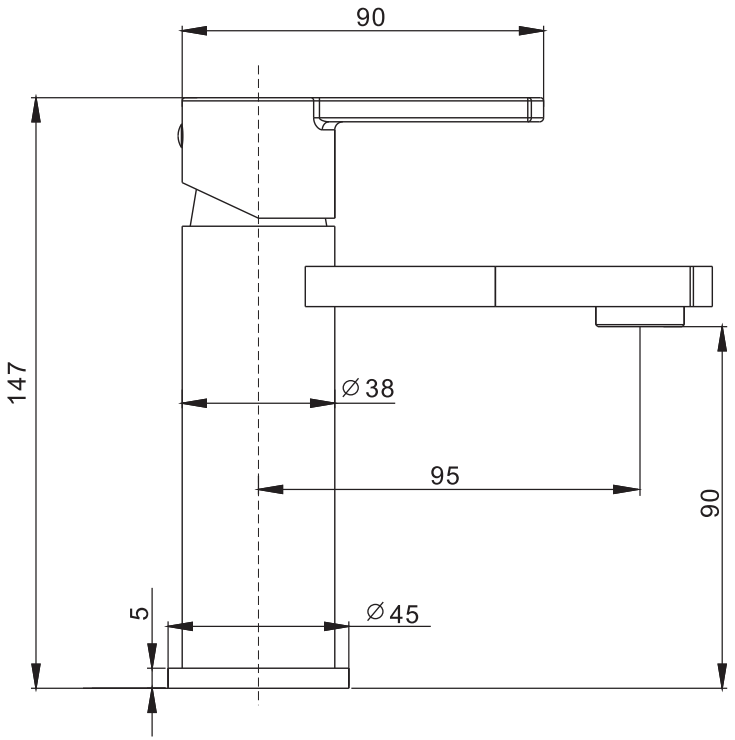

NOTE: ALL DIMENSIONS IN MILLIMETRES

INSTALLATION

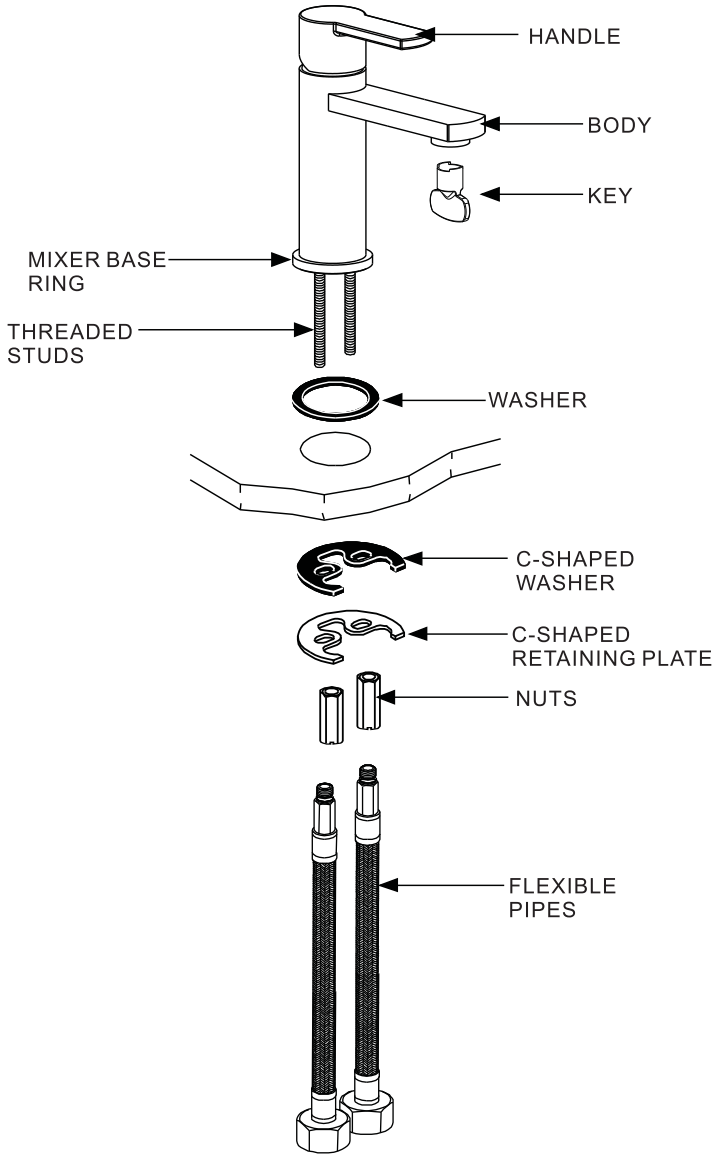

INSTALLATION

First shut off your water heating system then, with your mains stop cock closed, open the lowest hot and cold taps in the house and allow to run until the cold storage tank and pipes are empty (the hot water storage cylinder always remains full).
Fitting isolating valves to the inlet feeds is recommended for ease of maintenance.

INSTALLATION

⚠ **Remember to turn off the mains water supply before connecting to any existing pipe work.**

Screw the flexible pipes into the mixer body, and fully hand tighten. Place mixer in position to see if any alteration to the existing supply pipework is necessary. After making any necessary alterations to the pipework, pass the mixer base ring and washer over the flexible pipes and threaded stud to form a seal on sink top. Pass the tails and fixing stud through the hole in the basin from above, and place the mixer in position on the basin.

Slide the C-shaped black washer and then the metal retaining plate up the tails and secure screwing the fixing nut finger tight.

Check that the mixer body is correctly positioned to the rear and tighten fixing nut. The tap needs to be fixed firmly but do not over tighten as damage may be caused to the sink.

If using copper tails they will need to be gently turned outwards, then supported approximately half-way down and turned inwards, making the two pipes parallel again but further apart thus making room for the couplings to be fitted. It is recommended that 15mm x15mm compression fittings be used to connect mixer to supply pipes. Hot water should be connected to the left inlet when the tap is viewed from the front.

ATTENTION

Having first checked all new connections, turn on the mains stop cock, close all taps except the new mixer and as the system starts to refill check for leaks.

Once you have satisfied yourself that there are no leaks, switch on the water heating.

MAINTENANCE

CLEANING THE CARTRIDGE
The concealed cartridge should give trouble free service, but in the event of any problems, servicing is straight forward.

To remove the cartridge.
Pull off the cover cap and with an hexagonal key loosen the screw, but do not remove it. Pull off the handle and unscrew the cover. Using the correct size spanner unscrew and remove the retaining nut. Pull out the cartridge taking note of its orientation. Wash the cartridge with clean running water and make sure that any trapped debris has been removed. Dry and lightly grease the seal (only use silicone grease) and replace the cartridge followed by the nut, cover and handle.

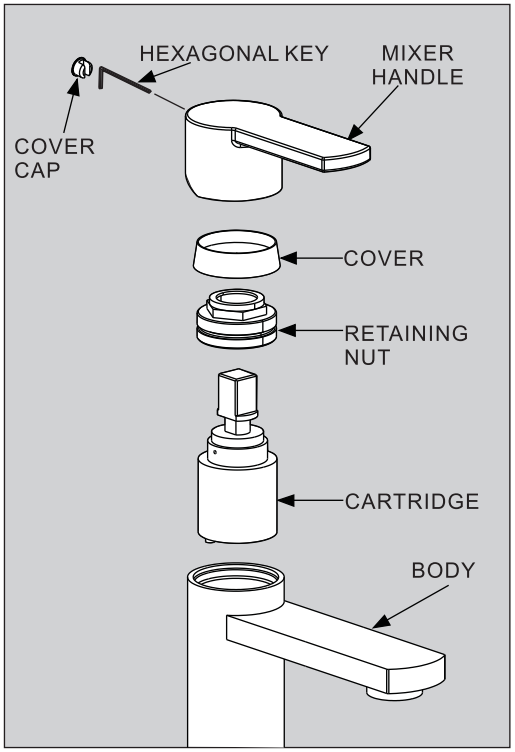

CLEANING
The chrome and gold plate we use on our taps is very durable, nevertheless care should be taken when cleaning them. They should be cleaned only with warm soapy water followed by rinsing with clean water and drying with a soft cloth. All finishes are vulnerable to acid attack and some strong substances such as household cleaners, disinfectants, denture cleaners, hair dyes, wine making and photographic chemicals can cause the surface to go black or peel.