GROHE

ENJOY WATER®

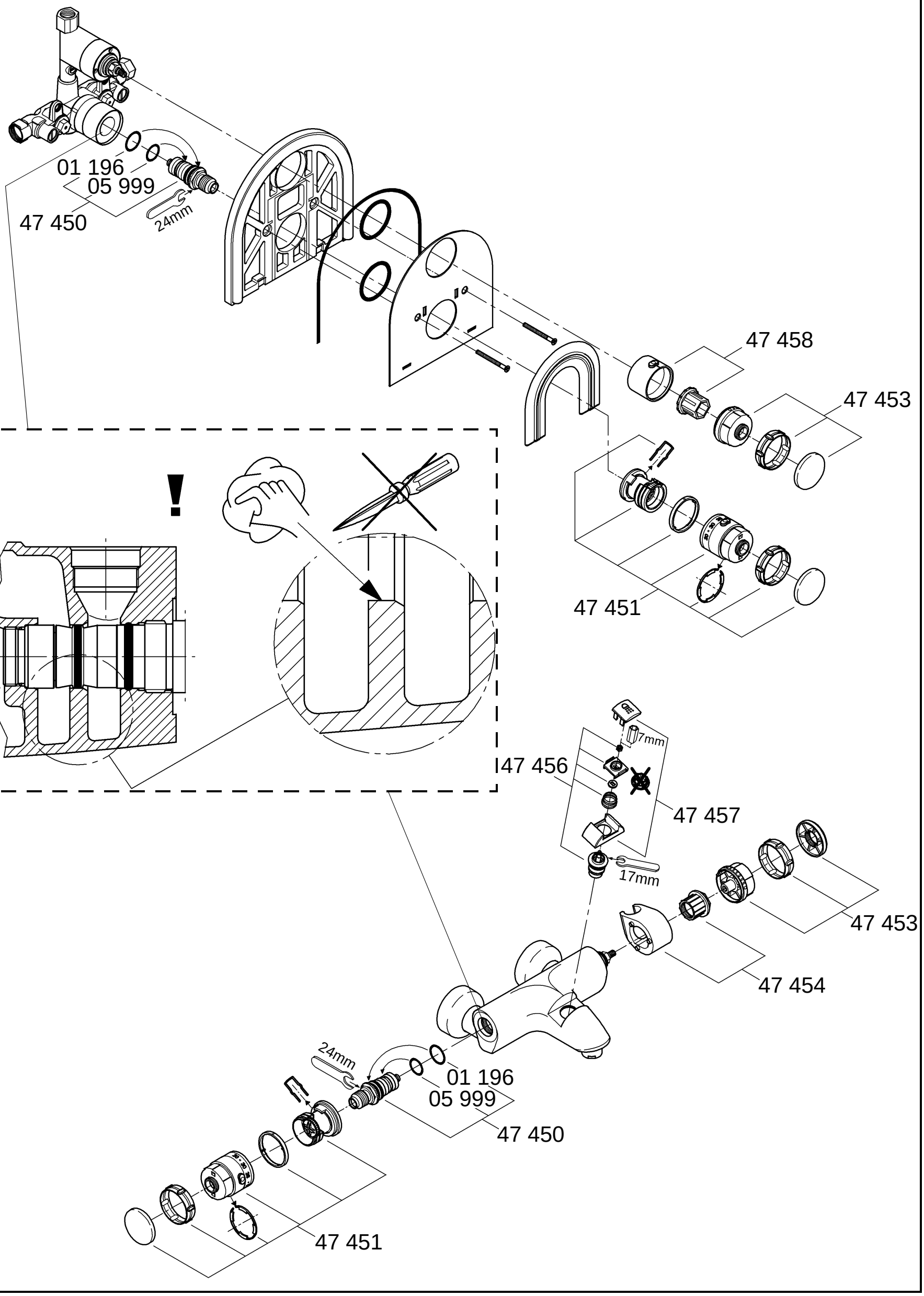

97.658.231/ÄM 210502/09.08

Design & Quality Engineering GROHE Germany

GROHE

ENJOY WATER®

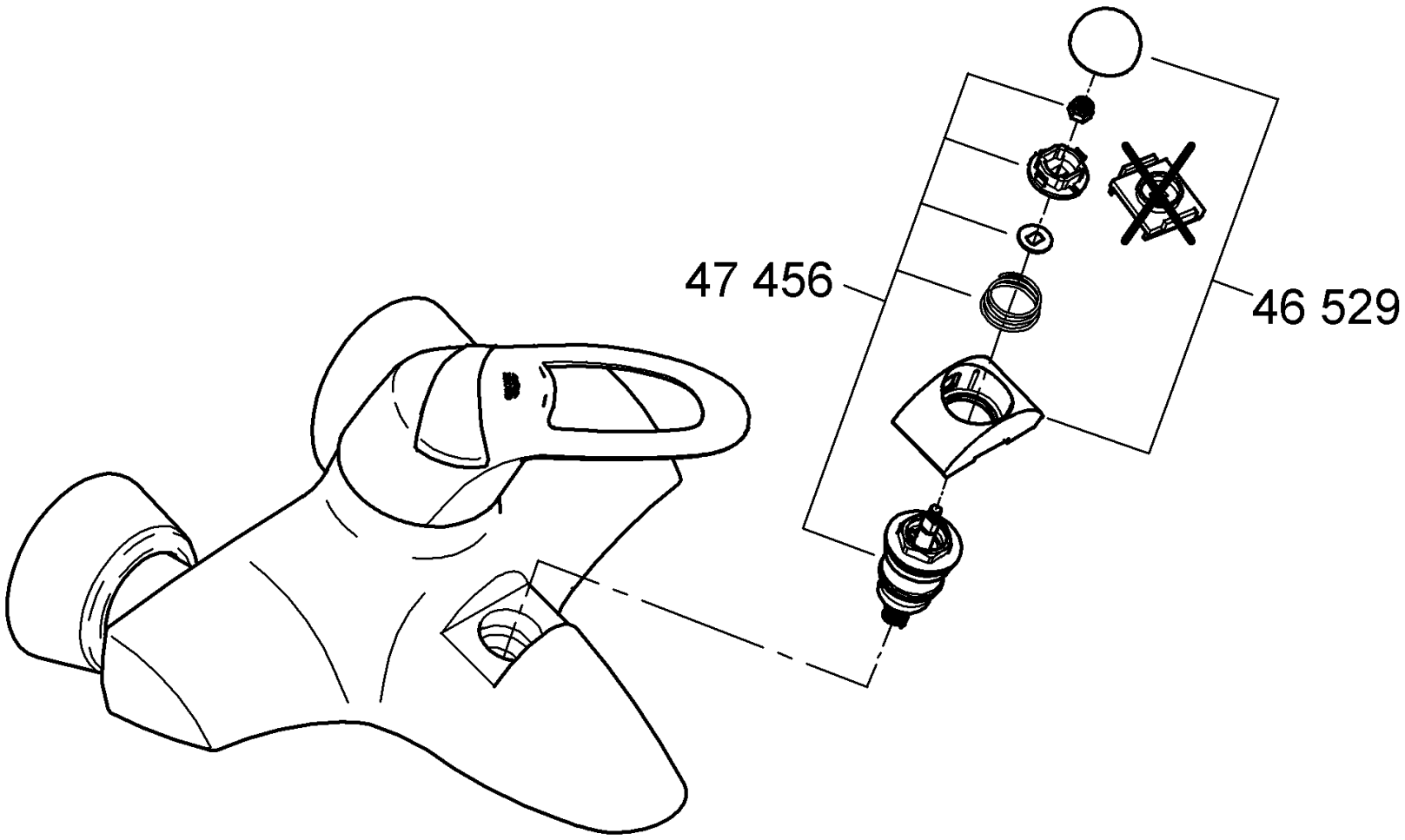

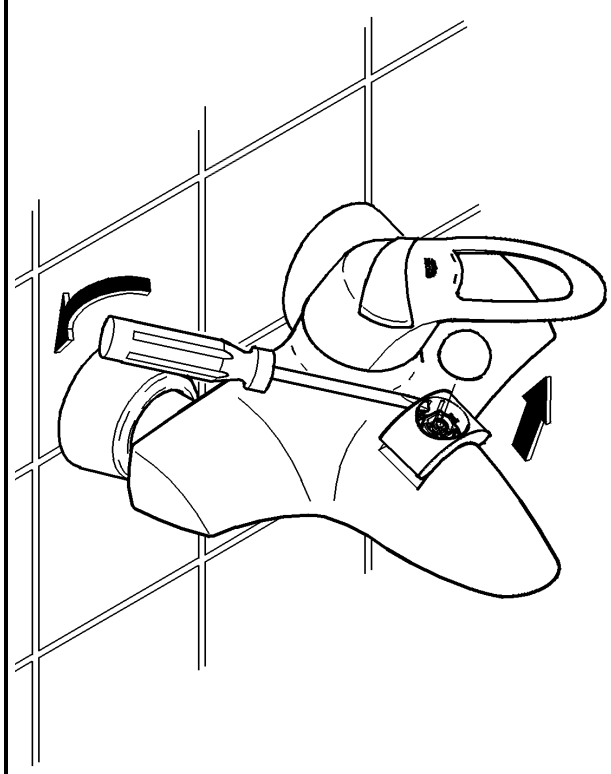

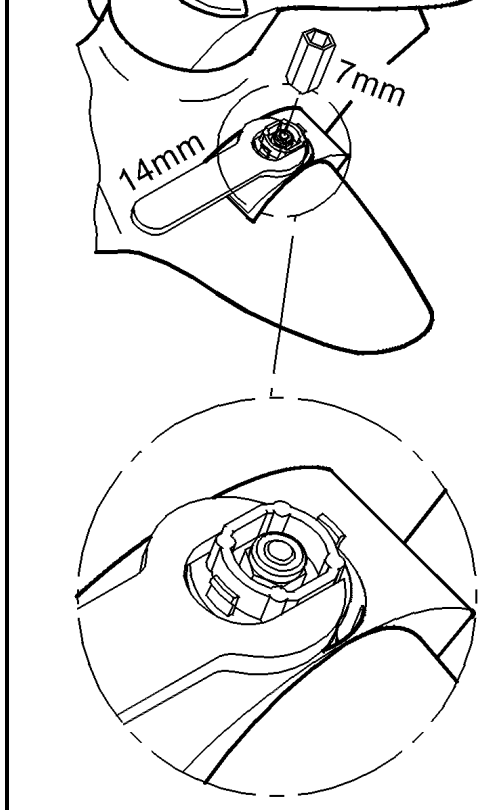

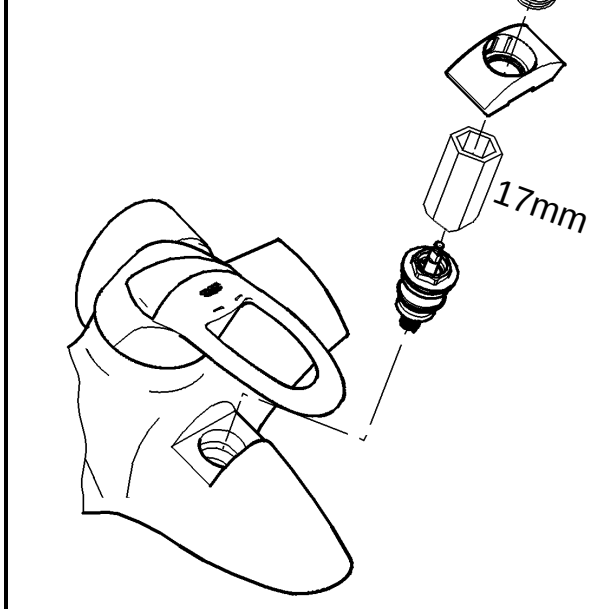

1 2 3

Design & Quality Engineering GROHE Germany