Mira Decor

8.5kW, 9.5kW and 10.8kW Electric Shower

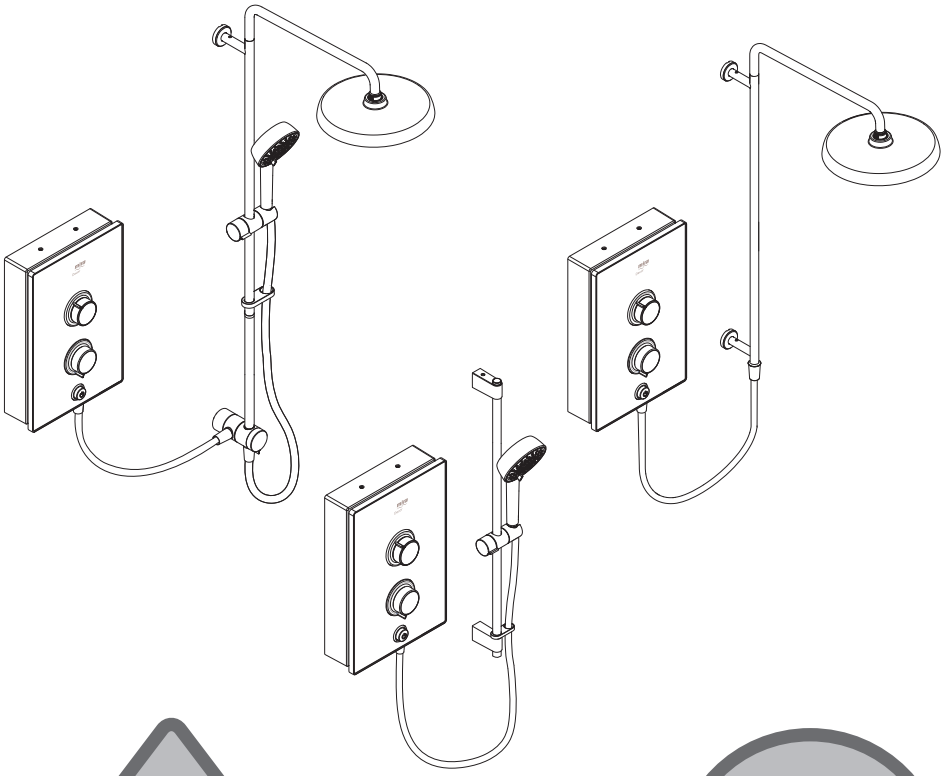

For Safety! Before installing or using this shower, you MUST read this guide.

For SPARES, ADVICE or REPAIRS please call us free on 0800 001 4040 (UK only)

Installation and User Guide

These instructions must be left with the user

Showering perfection

mira SHOWERS

Important Safety Information

Warning! This shower can deliver scalding temperatures, cause fire, electric shock or other personal injury if not operated, or maintained in accordance with the instructions, warnings and cautions contained in this guide and on the appliance.

Please read the important safety information and the operation section of this guide before using the shower. Failure to follow the information or instructions provided on or with this shower will invalidate the guarantee.

Warning! The shower head and hose supplied with this product are critical to its correct operation. When installing or exchanging an electric shower always fit and use the shower head and hose provided with the product.

If any future change of the shower head or hose is required only fit suitable Mira manufactured products. Non-Mira manufactured shower heads may not be suitable for electric showers. They can be very restrictive or stop the flow of water, this is dangerous and could lead to product damage, scalding or serious injury.

If you are unsure about the shower head and hose compatibility with your shower contact Mira Customer Services.

TO REDUCE THE RISK OF FIRE, ELECTRIC SHOCK OR INJURY:

1. Children younger than 3 years should not use this shower. Children 3 years to under 8 years should only use this shower under continuous supervision. Children aged 8 years and above and persons with reduced physical, sensory or mental capabilities or lack of experience or knowledge can use the shower if they are given supervision or instruction concerning use of the appliance in a safe way and understand the hazards involved.
2. Children shall not be allowed to play with the shower.
3. Cleaning and user maintenance shall not be made by children.
4. **DO NOT** restrict the water flow from the shower outlet, temporarily bending the shower hose or blocking the shower head, such as placing against your body while in use can cause a very hot shot of water to be discharged.

5. The outlet must not be connected to any tap or fitting other than those specified.
6. The showerhead must be descaled regularly. Any blockage of the showerhead or hose can cause injury or scalding.
7. **Warning! DO NOT** switch on if there is a possibility that the water in the shower is frozen.
8. **Warning!** If the shower has symptoms of low or no flow from the outlet, immediately turn it off and **DO NOT** operate the shower. Any further diagnosis must be carried out with the power control set to low and the temperature control set to full cold (see **Commissioning**).
9. This shower must be provided with means for local disconnection that is incorporated into the fixed wiring in accordance with the relevant local wiring regulations. This must be a double pole switch, which has at least 3 mm contact separation in each pole. The switch can be a ceiling mounted pull-cord type within the shower room or a wall mounted switch fitted in the applicable zone area.
10. Installation of the shower must be carried out in accordance with these instructions by qualified, competent personnel. Read all instructions before installing the shower.
11. **DO NOT** switch the shower on if water starts leaking from the shower case. Isolate the electrical supply to the shower immediately.
12. **DO NOT** switch the shower on if the case appears to be damaged or incorrectly fitted. Isolate the electrical supply to the shower immediately.
13. **DO NOT** increase the power setting or adjust the temperature control rapidly while using the shower. Move away from the shower and ensure the temperature has stabilised before re-entering the shower.
14. **DO NOT** switch the shower off and back on while standing in the water flow. Move away from the shower and ensure the temperature has stabilised before re-entering the shower.
15. **DO NOT** change the handset model. Fit only shower heads recommended by Mira and do not fit any additional device to restrict the water outlet flow.

16. When adjusting the handset mode, point handset away from body and make sure that the water temperature has stabilised before continuing to shower.
17. Use caution when altering the water temperature, always check the temperature before continuing to shower.
18. Switch the shower off at the electrical isolating switch when not in use. This is recommended with all electrical appliances.
19. Isolate the electrical and water supplies before commencing installation. The electricity must be isolated at the consumer unit and the appropriate circuit fuse removed, if applicable. Mains connections are exposed when the cover is removed.
20. **DO NOT** install the shower in areas with high humidity and temperature (i.e. Steam rooms and saunas).
21. **DO NOT** install the shower where it may be exposed to freezing conditions. Ensure that any pipework that could become frozen is properly insulated.
22. **DO NOT** connect the outlet of the shower to any tap, control valve, trigger operated handset or showerhead other than those specified for use with this shower as the outlet acts as a vent for the tank body. Only Kohler Mira recommended accessories should be used.
23. **DO NOT** perform any unspecified modifications, or drill or cut holes in the product other than instructed by this guide. When servicing only use genuine Kohler Mira replacement parts.
24. **DO NOT** connect this shower to a Waste Water Heat Recovery System as this may cause unstable or scalding temperatures to be delivered from the shower head.
25. Always check the water temperature is safe before entering the shower.
26. The water supply to this product must be isolated if the product is not to be used for a long period of time. If the product or pipework is at risk of freezing during this period they should also be drained of water.
27. If the shower is dismantled during installation or servicing then, upon completion, an inspection must be made to ensure all electrical connections are tight and that there are no leaks.

28. This appliance is intended to be permanently connected to the water mains and not connected by a hose set.
29. The water inlet of this appliance shall not be connected to a water supply obtained from any other water heating system.
30. **Warning!** This appliance is not to be used to provide a potable water supply.
31. Maximum Static Pressure is 1000 kPa (10 bar).
32. Minimum Dynamic Pressure is 100 kPa (1.0 bar) for 9.5 kW Dual/ Single Fixed & 10.8 kW Single/Dual

    Minimum Dynamic Pressure is 70kPa (0.7 bar) 8.5 kW and 9.5 kW

Pack Contents

Electric Shower

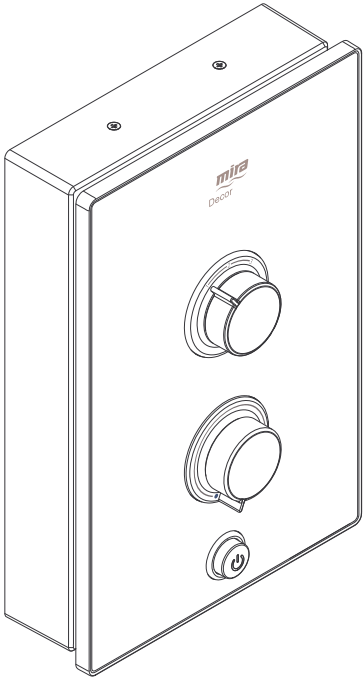

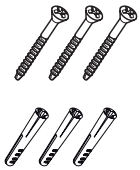

- 3 x Screws
- 3 x Wall Plugs

- 1 x Electric Shower

Single Variable

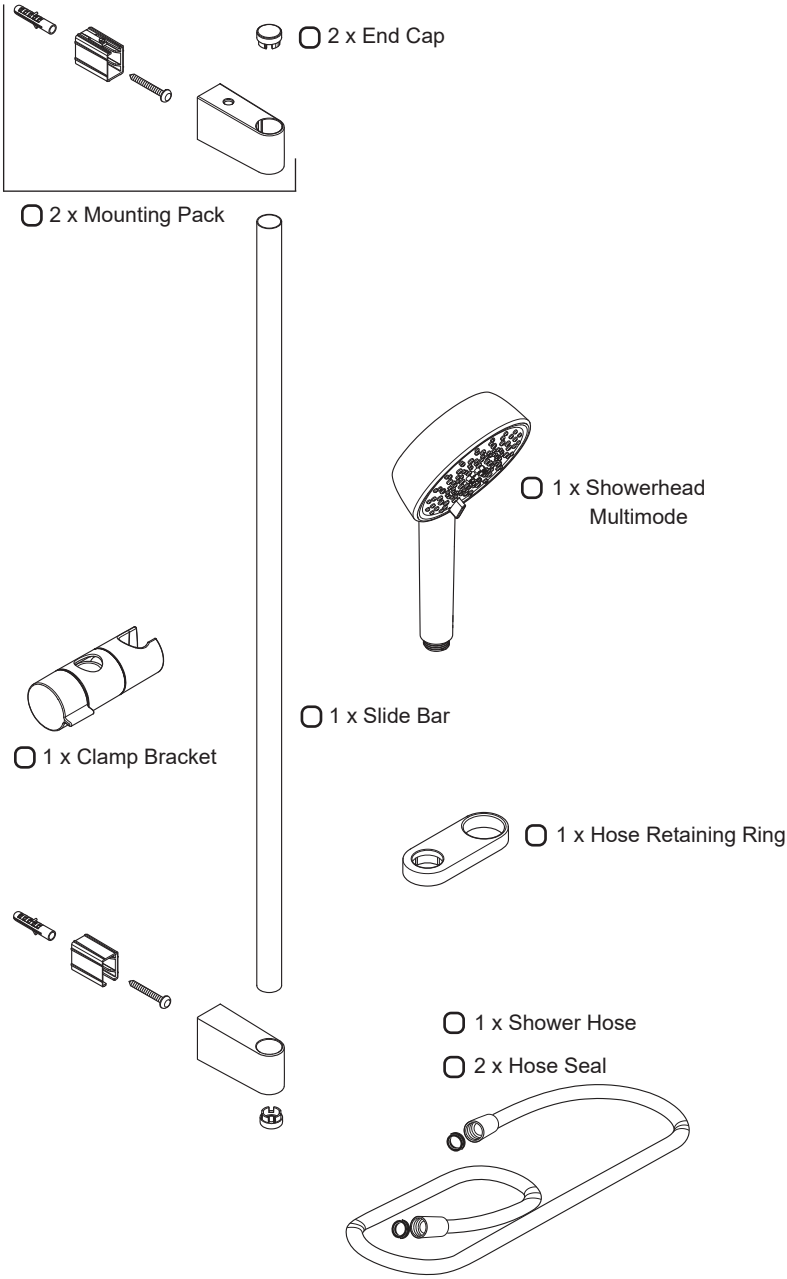

Dual Variable

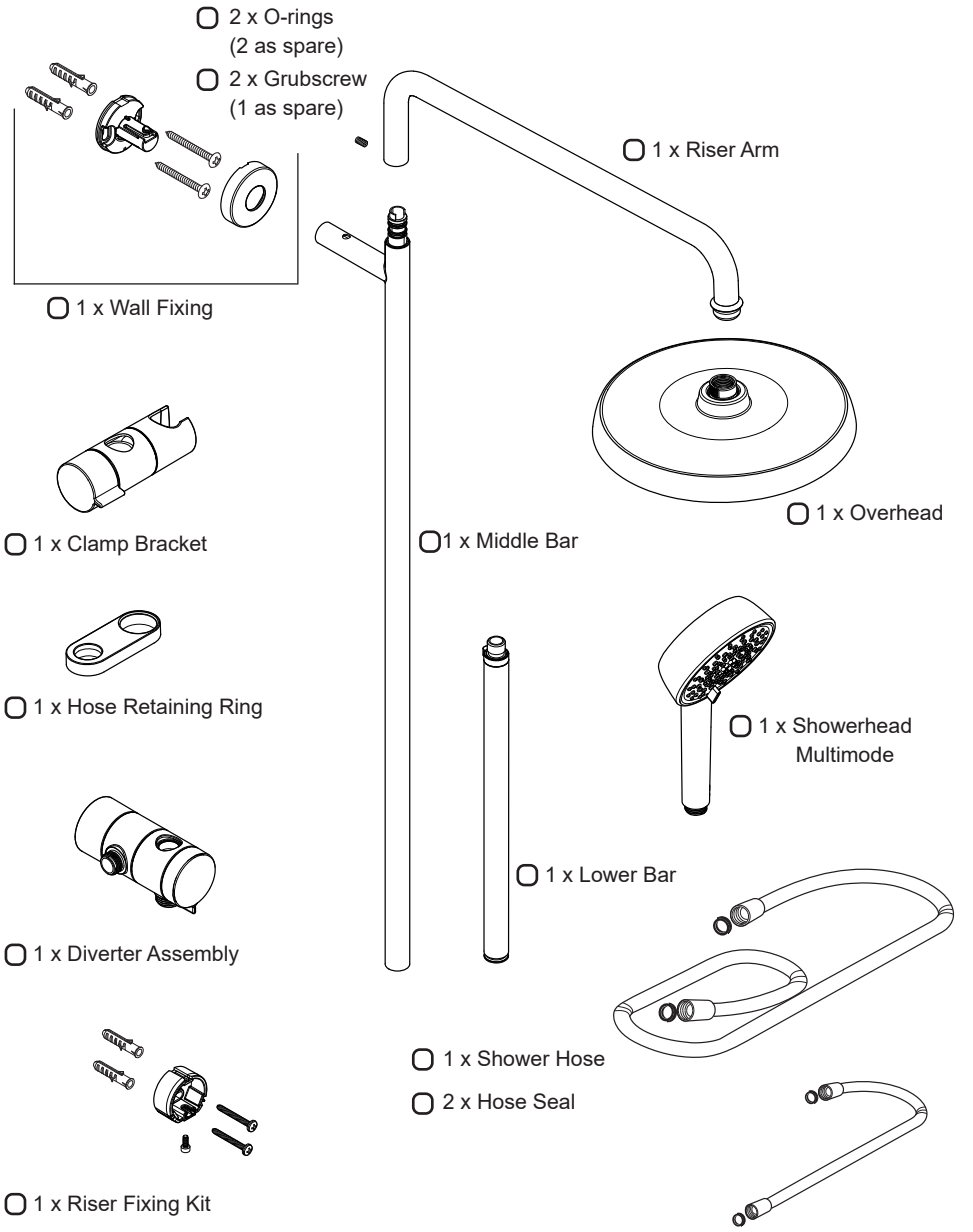

Fixed Single Variable

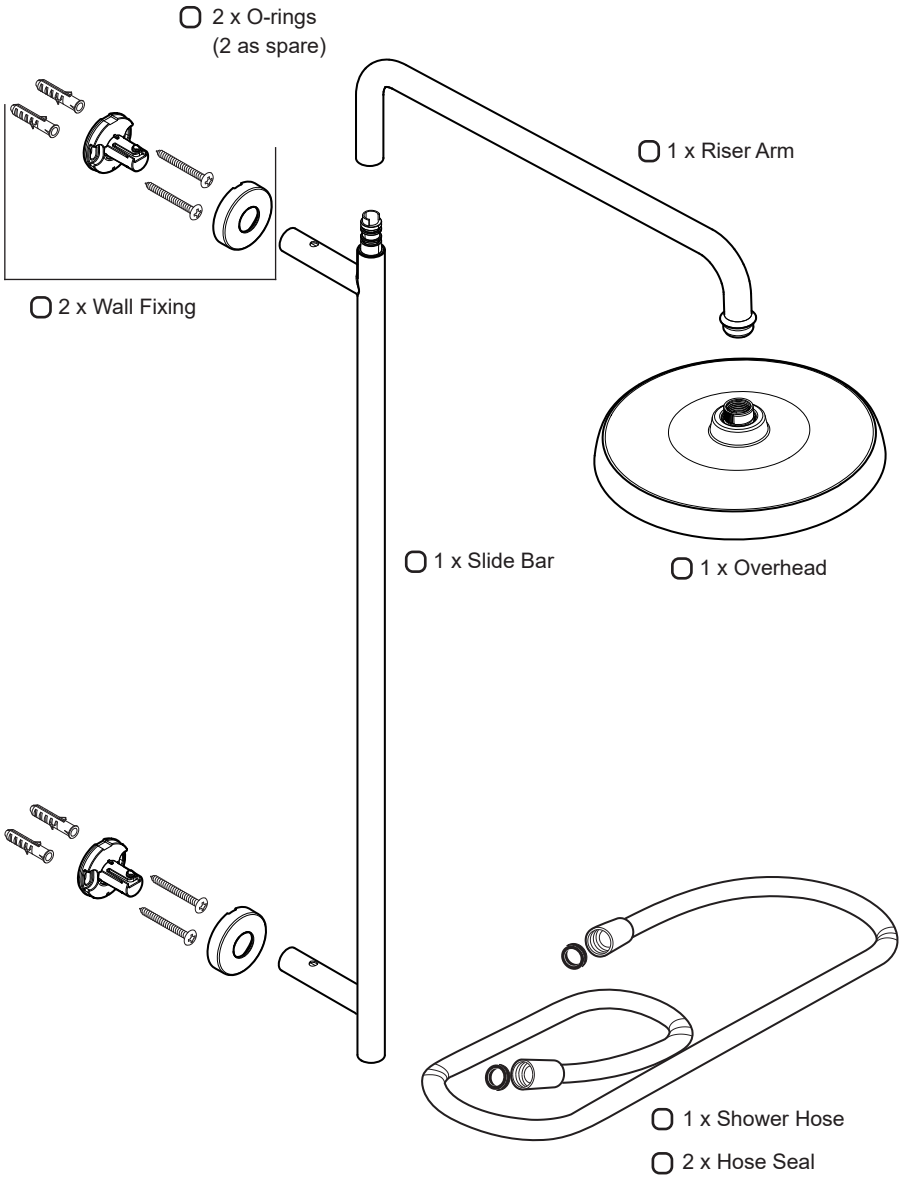

Introduction

Thank you for choosing a Mira shower. To enjoy the full potential of your new shower, please take time to read this guide thoroughly, and keep it handy for future reference. Products manufactured by Kohler Mira Ltd are designed to be safe, provided that they are installed, used and maintained in good working order, in accordance with our instructions and recommendations.

Follow all warnings, cautions and instructions contained in this guide, and on, or inside the shower. This guide is also available in digital format from our website or by contacting customer services.

Products Covered

Product Variant	kW	Model Number	Colour
Mira Decor Single Outlet	8.5 kW	J10Kn	White
			Warm Silver
			Bronze
			Black Onyx
Mira Decor Single Outlet	9.5 kW	J10Ln	White
			Warm Silver
			Bronze
			Black Onyx
Mira Decor Single Outlet	10.8 kW	J10Nn	White
			Warm Silver
			Bronze
			Black Onyx
Mira Decor Dual Outlet	9.5 kW	J10Pn	White
			Warm Silver
			Bronze
			Black Onyx
Mira Decor Dual Outlet	10.8 kW	J10Mn	White
			Warm Silver
			Bronze
			Black Onyx
Mira Decor Fixed Single Outlet	9.5 kW	J10Qn	Warm Silver

Recommended Usage

Domestic	✓	Light Commercial	✗
Heavy Commercial	✗	Healthcare	✗

Patents and Design Registration

Design Registration:	003617653-0006
Patents:	GB2: 427460; Ireland: 85912

Specifications

Dimensions	
Height	332 mm
Width	220 mm
Depth	73.5 mm (97.4 mm including Dials)

Plumbing	**Variant**		
	8.5 kW & 9.5 kW Variable Single	10.8 kW Variable Single & 9.5 kW Fixed Single	9.5 kW & 10.8 kW Dual
Minimum Dynamic Pressure	70 kPa (0.7 bar)	100 kPa (1.0 bar)	
Maximum Dynamic Pressure	500 kPa (5.0 bar)		
Maximum Static Pressure	1000 kPa (10.0 bar)		
Minimum Static Pressure	50 kPa (0.5 bar)		
Maximum Inlet Temperature	30°C		
Minimum Inlet Temperature	2°C		
Inlet Connection	15 mm Compression / Push-fit Coupling		
Maximum Water Hardness	200 ppm $CaCO_3$		
Outlet Connection	1/2” BSP Male		

Electrical	**Variant**		
	8.5 kW	9.5 kW	10.8 kW
Nominal Power at 240 V ac	8.5 kW	9.5 kW	10.8 kW
Nominal Power at 230 V ac	7.8 kW	8.7 kW	9.9 kW
Recommended MCB Rating	40 A		45 A
Maximum Supply Cable Size	16 mm²		
Recommended RCD Rating	30 mA tripping current		
Recommended Isolator Switch	45 A double-pole with 3 mm contact separation		
Appliance Sealing Rating	IP X4		
Maximum Ambient Temperature	30°C		
Minimum Ambient Temperature	2°C		

Guarantee

For **domestic installations**, Mira Showers guarantee the Mira product against any defect in materials or workmanship for a period of **two years** from the date of purchase (shower fittings for one year).

For **non-domestic installations**, Mira Showers guarantee the Mira product against any defect in materials or workmanship for a period of **one year** from the date of purchase. For Terms and Conditions refer to the back cover of this guide.

UK & EU Conformity Information

This product is in conformity with the relevant statutory requirements applicable to the product:

UK Legislation:

- S.I. 2016/1091 Electromagnetic Compatibility Regulations
- S.I. 2016/1101 Electrical Equipment (Safety) Regulations
- S.I. 2012/3032 Restriction of the Use of Certain Hazardous Substances in Electrical and Electronic Equipment
- S.I. 2010/2617 The Ecodesign for Energy-Related Products and Energy Information Regulations

EU Legislation:

- 2014/35/EU - Low Voltage Directive (LVD)
- 2014/30/EU - Electromagnetic Compatibility Directive (EMC)
- 2011/65/EU - Restriction of Hazardous Substances Directive (RoHS)
- (EU) No 814/2013 - Ecodesign requirements for water heaters and hot water storage tanks

This range of electric showers are high power appliances and are subject to conditional connection. If the main electrical supply fuse is rated less than 80 Amps, the local electricity supply company must be contacted to confirm if the electrical supply is adequate.

This range of showers complies with the requirements of the UK's water regulations.

Disposal and Recycling

End of Product Life

Electrical and electronic devices contain a range of materials that can be separated for recycling and used in new products.

This product should not be disposed of with your general household waste. When this product has reached the end of its serviceable life, please remove any batteries and take it to a recognised WEEE (Waste Electrical and Electronic Equipment) collection facility such as your local civic amenity site for recycling.

Your local authority or retailer will be able to advise you of your nearest recycling facility.

Eco-Design/Energy Labelling

Product Information

Indicative annual electricity consumption (kWh), based upon 2100 Wh daily water energy demand. Actual electricity consumption will depend on kW rating and the duration and frequency of use.

	Mira		
	Decor		
	8.5 kW	9.5 kW	10.8 kW
Load Profile	XS	XS	XS
Efficiency Class	A	A	A
Efficiency (%)	39.1	39.0	38.9
Annual Electricity Consumption (kWh)	472	473	474
Sound Power Level (dB)	15	15	15

Installation Requirements

Plumbing

1. The plumbing installation must comply with all national or local water regulations and all relevant building regulations, or any particular regulation or practice specified by the local water supply company.
2. **DO NOT** use any other shower fittings. Only install and use the shower hose and handset provided with this product.
3. **DO NOT** use sealing compounds on any pipe fitting or joints.
4. **DO NOT** install the product in a position in which service access is limited.
5. Decide on a suitable position for the shower (minimum distance of 200 mm from the ceiling to allow for cover fit and removal).
6. The shower is suitable for installation within the shower area and is fitted with a pressure relief valve. It must be positioned over a water catchment area with the controls at a convenient height for the user.
7. The shower must be fitted to a waterproof flat and even wall surface.
8. **DO NOT** fit the shower to the wall and tile up to the case.
9. **DO NOT** seal the gap between the shower and the wall surface.
10. The showerhead should be positioned so that it discharges down the centre line of the bath or across the opening of a shower cubicle. For dual outlet shower fittings (Overhead shower and Handset), finished position of the overhead shower should also be considered to prevent water spraying on to the shower unit.
11. The showerhead must be directed away from the shower unit, during normal use the showerhead must not spray directly on to the shower unit.
12. **DO NOT** apply excessive force to plumbing connections; always provide mechanical support when making plumbing connections. Any soldered joints should be made before connecting the shower.
13. This shower is not designed to be plumbed directly from the rear. For rear-entry supply, add an elbow to the supply pipe and connect as a rising or a falling supply.
14. If pipework and/or electrical cables enter the shower from the rear through a hole in the wall provision must be made to prevent water ingress back into the wall structure.
15. This shower is intended to be permanently connected to the mains water supply, only use the inlet connection supplied with the shower.

    DO NOT use any other type of fitting or flexible hose set.
16. A full bore/non restrictive servicing valve must be fitted in a readily accessible position adjacent to the shower to facilitate maintenance of the shower. **DO NOT** use a valve with a loose washer plate (jumper) as this can lead to a build up of static pressure.

17. A water treatment device should be installed where the water hardness may exceed 200 ppm. Malfunctions caused by excessive limescale formation are not covered by this shower's guarantee (see back page for details).
18. The installation must not cause the hose to be sharply kinked during normal use.
19. **DO NOT** perform the electrical installation until the plumbing has been completed and checked for leaks.
20. The position of the shower and shower fittings must provide a minimum gap of 25 mm between the showerhead and the spill over level of any bath, shower tray or basin and a minimum gap of 30 mm between the showerhead and the spill over level of any toilet, bidet or other appliance with a Fluid Category 5 backflow risk.

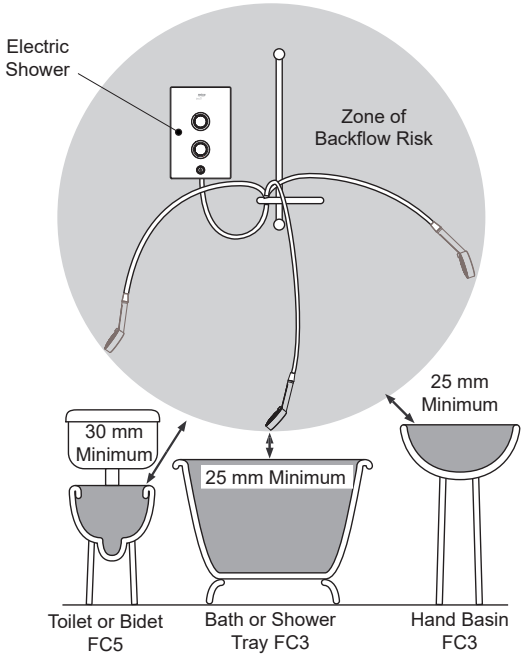

Hose retaining ring fitted and shower fittings fixed at a suitable height preventing dirty water backflow

Note: There will be occasions when the hose retaining ring will not provide a suitable solution for Fluid Category 3 installations, in these instances an outlet double check valve must be fitted, this will increase the required supply pressure typically by 10kPa (0.1 bar). Double check valves fitted in the inlet supply to the appliance cause a pressure build up, which affect the maximum static inlet pressure for the appliance and must not be fitted. For Fluid category 5 double check valves are not suitable.

Electrical

1. The electrical installation must comply with BS 7671 (commonly referred to as the IEE Wiring Regulations) and all relevant building regulations, or any particular regulation or practice specified by the local electricity supply company.
2. Ensure that all circuit protection devices, switches and cabling is adequate for the rated current of the shower and that the rating of the electricity supply company fuse and the consumer unit are adequate for the additional demand.
3. The shower **must** be earthed. Ensure any supplementary bonding complies with the relevant regulations.
4. This shower is intended to be permanently connected to the fixed electrical wiring of the mains system. A separate supply **must** be provided from the consumer unit to the shower.
5. **DO NOT** supply any other electrical equipment including extractor fans or pumps via this product.
6. This shower must be provided with means for local disconnection that is incorporated into the fixed wiring in accordance with the relevant local wiring regulations. This **must** be a double pole switch, which has at least 3 mm contact separation in each pole. The switch can be a ceiling mounted pull-cord type within the shower room or a wall mounted switch fitted in the applicable zone area.
7. For new installations a 30mA Residual Current Device (RCD) must be incorporated into the electrical supply to the shower in accordance with the current wiring regulations. When replacing an existing electric shower we recommend that a 30mA RCD is incorporated in accordance with current wiring regulations if not already provided.
8. All electrical connections should be checked for tightness to prevent overheating before switching on the electrical supply.

   Note: DO NOT apply excessive force to the terminal block.
9. **DO NOT** switch on the electrical supply until the plumbing has been completed and checked for leaks.

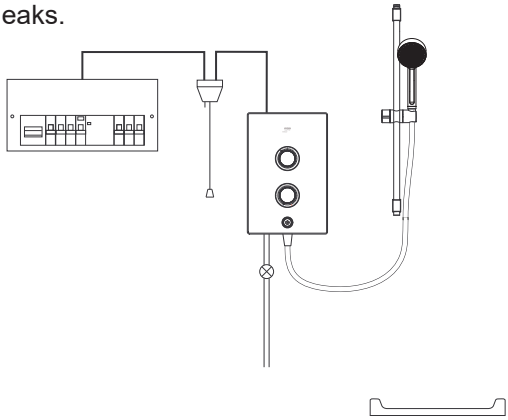

Plumbing and Electrical Schematic

Install the Shower

Warning! Isolate the electrical and water supplies before installing the shower.

1

Ceiling

Note: To ensure optimum water temperature we recommend the shower overhead is at a height suitable for all users and ideally no more than 100mm above the user.

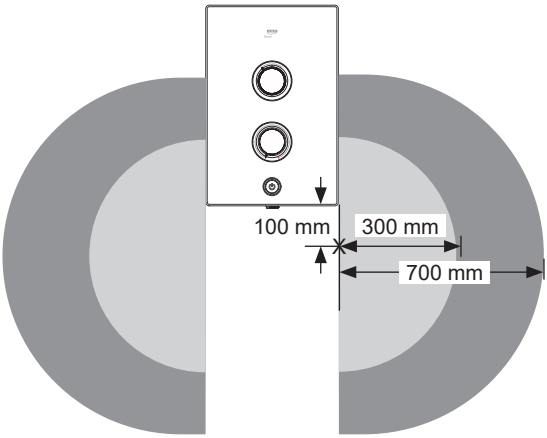

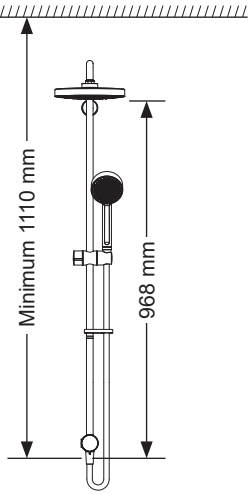

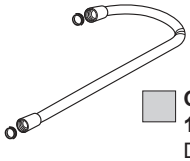

GP1672049W-BL (Black)
1894.017 (Chrome)
Diverter Hose
(0.6 m)

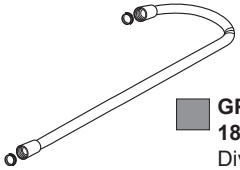

GP1672050W-BL (Black)
1894.018 (Chrome)
Diverter Hose
(1.0 m)

If the diverter is positioned outside of the light grey area as shown in the diagram a longer link hose is available up to 1.0 m max in length.

Note: Ensure the position of the shower and the diverter valve for the dual head product allows for easy connection of the short supplied hose and the overhead is at a suitable height for all users. The diverter should be positioned at least 100 mm minimum below the bottom of the shower and within the grey area to ensure the link hose is not kinked or under any strain.

Note: The dual outlet shower diverter valve that comes with this product is designed specifically for electric showers. DO NOT fit any other type of diverter to the electric shower.

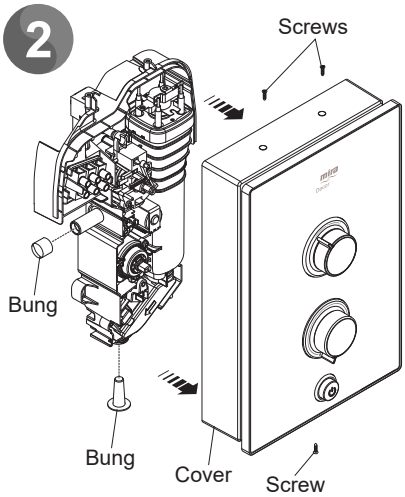

Remove the three screws that hold the cover on and remove the cover.

Remove the bungs.

Using the holes in the case, level and mark the positions of the **three** fixing holes.

Drill three holes to suit the fixing screws and wall plugs.

Caution! DO NOT drill into cables or pipes in the wall.

Note: Ensure that there are sufficient lengths of supply pipe and electrical cable to reach the connection points.

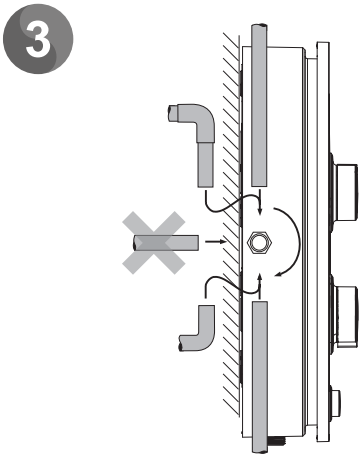

Determine the direction and route of the incoming water supply: falling (entering the shower from the top), or rising (entering the shower from the bottom).

Note: DO NOT use an incoming supply entering the shower directly from the back. Add an elbow to the supply pipe and connect it as a rising or falling supply.

Thoroughly flush the supply pipe before connecting the product.

Determine the direction and route of the electric supply cable.

Note: If electric cables or pipes enter the shower through the wall, ensure any holes are sealed to prevent water ingress back into the wall structure.

4

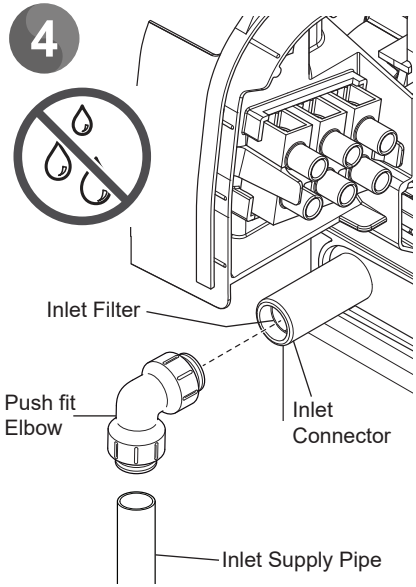

Check the inlet filter is in position before connecting inlet supply.

Connect the inlet supply pipe to the inlet connector using a push fit elbow or an elbow with compression nuts and olives.

Important! DO NOT use push fit elbows that require specialist tools for removal. Access to the inlet filter is required periodically and so any connector needs to easily removed for maintenance.

Upon completion of the installation ensure connections and back case are not under any stress due to misaligned pipework or electrical cables.

5

Turn on the water supply and check for leaks.

6

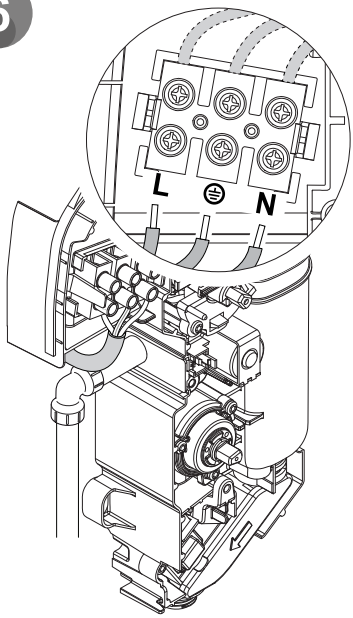

Strip back sufficient outer cable insulation to enable routing to terminal block.

Fit an earth sleeve to the earth wire.

Loosen the screws in the terminal block and insert the wires.

L (Live) = Brown Wire

⏚ (Protective Earth) =

Green /Yellow Sleeved Wire

N (Neutral) = Blue Wire

Tighten the screws in the terminal block, ensure the wires are secure and tight.

Note: DO NOT exert strain on the terminal block. Make sure that the electrical connections are tightly screwed down.

7

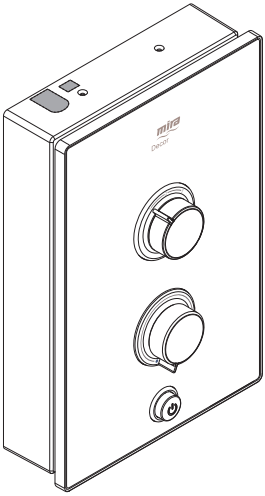

The cover has thinned sections that can be removed to allow entry of the supply pipe and electrical cables.

Remove the top thinned section of the case for a falling supply, or remove the bottom thinned section for a rising supply.

If the electrical cables enter from above or below, remove an additional thinned section for the electrical cable. **DO NOT** remove any section if the electrical cables enter from the back.

Note: DO NOT extend beyond thinned section.

8

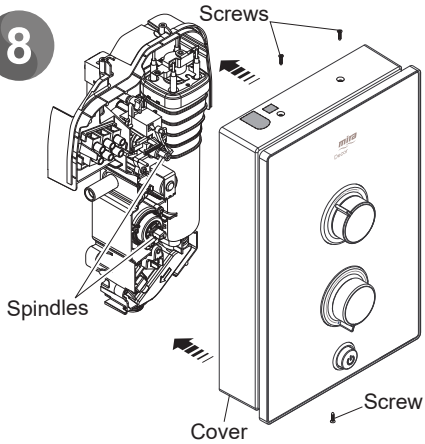

Ensure the earth bonding complies with relevant regulations.

Ensure the control dials are aligned with the spindles and replace the cover.

Tighten the three cover screws (**DO NOT** use electric screwdrivers to tighten the screws).

9

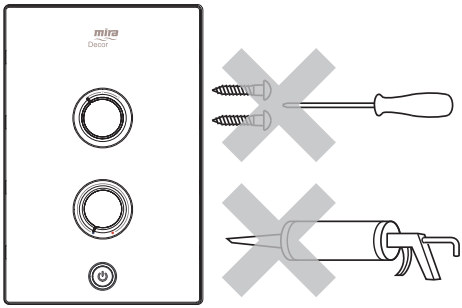

DO NOT use alternative screws to secure the cover. This can cause internal damage to the appliance.

DO NOT seal around any part of appliance.

This completes the installation, follow the guidelines in section **'COMMISSIONING'** to prepare the shower for use.

Install the Shower Fittings

Mira Decor Single Outlet

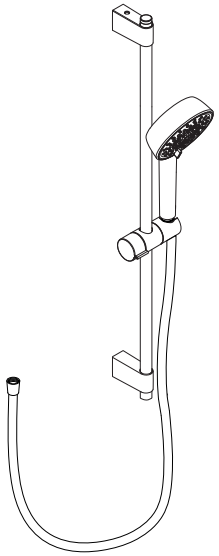

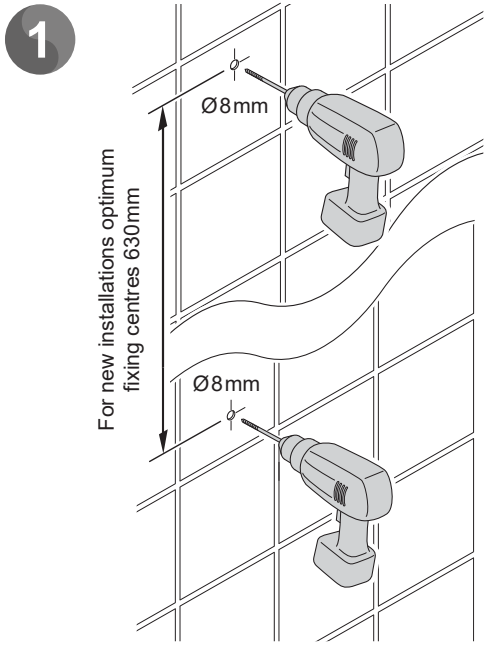

We recommend that the slide bar is installed with the ends flush. Mark the wall fixing positions and drill two holes to suit the wall fixings.

Caution! Do not drill into cables or pipes in the wall.

Note: For new installation optimum fixing centres 630 mm. Replacement installation fixing centres 630 mm maximum.

2

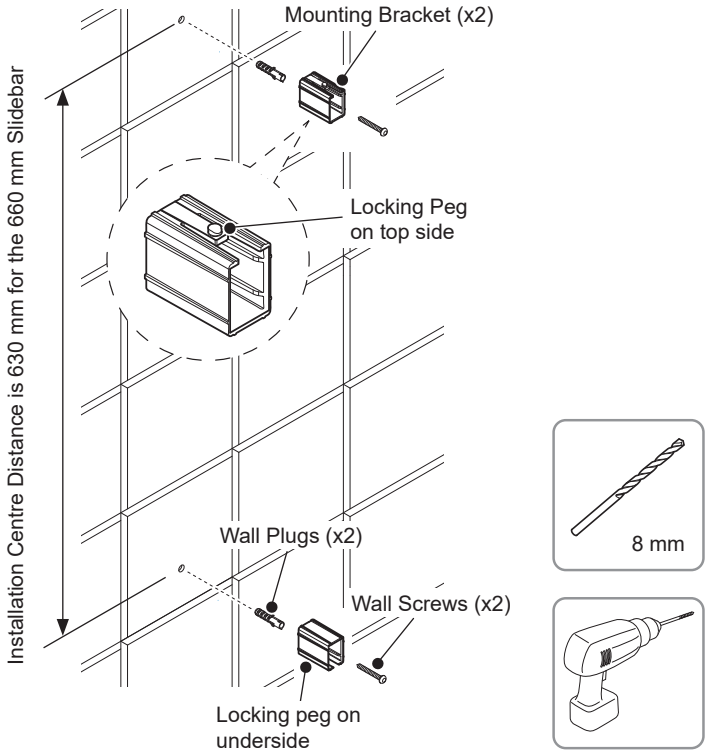

Mark the wall fixing positions and drill two holes to suit the wall fixings.

Caution! Do not drill into cables or pipes in the wall.
Note: Installation fixing centres are 630 mm for the 660 mm slidebar.
630 mm recommended for new installations.

Install the wall plugs and the mounting brackets and secure with the wall screws.

Note: Verify that the locking peg is orientated correctly.

Note: Check for vertical alignment before tightening. The mounting brackets are slotted to aid this alignment. Then fully tighten.

3

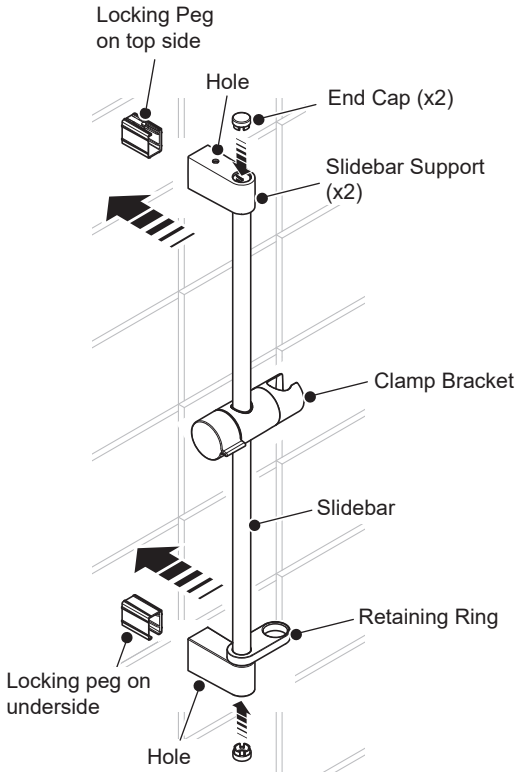

Install the clamp bracket, the hose retaining ring (smallest hole) and the slidebar supports to the slidebar.

Note: Orientate the hole on the slidebar supports in line with the locking peg on mounting bracket.

Ensure an equal length of slidebar protrudes from the top and bottom slidebar support (or flush with the end of the slidebar for new installations) and push onto mounting brackets. Ensure it clicks into place.

Caution! DO NOT force assembly onto the mounting brackets. Re-align slidebar support if required.

Important! Ensure that the locking peg clicks in and is fully engaged in the hole in the slidebar support.

Install the end caps, push fit into both ends of the slidebar.

Note: Slidebar support removal. Using a suitable tool, push and hold down the locking peg through the hole in the slidebar support and pull off.

4

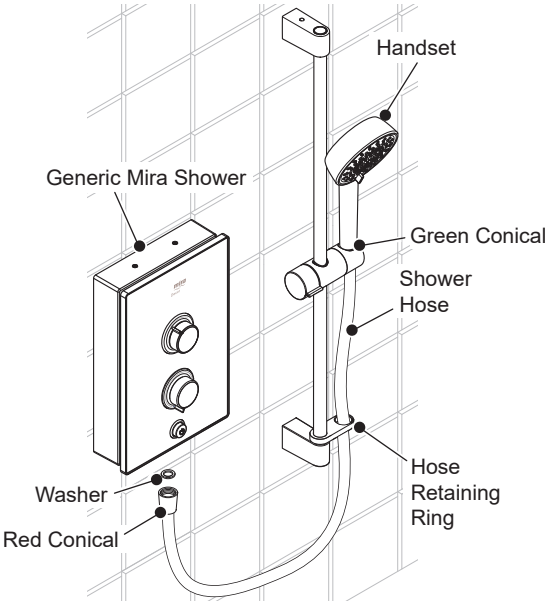

Hose and Handset Installation

Screw the red conical onto the outlet of the shower.

Caution! DO NOT over tighten.

Feed the hose through the hose retaining ring.

Screw the green conical onto the handset.

Caution! DO NOT over tighten.

Place the handset into the clamp bracket assembly.

Only use the supplied handset with this product.

Mira Decor Dual Outlet

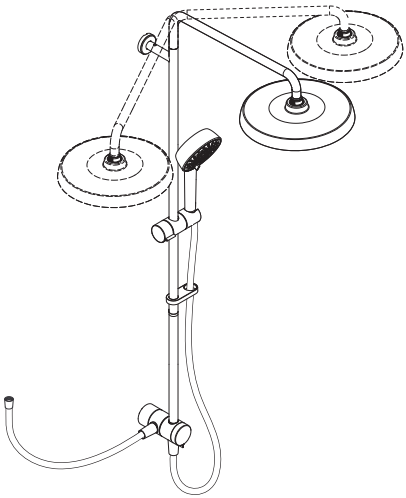

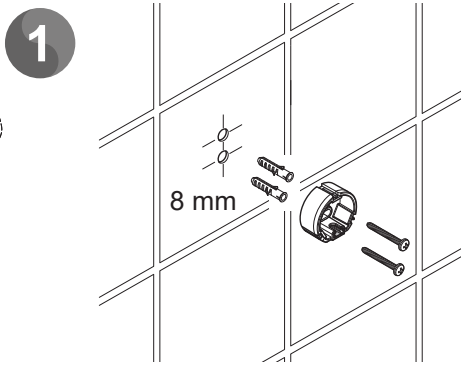

Refer to **Install the Shower** for positioning of the shower fitting and diverter.

Important! DO NOT allow the overhead or handset spray water directly on to the electric shower. The overhead and handset must be positioned so this does not occur.

We recommend that the diverter wall plate should be installed not more than 0.3 metres (Refer to image on page 15) away (this is to ensure that the shorter interconnecting diverter hose can be connected) from shower outlet. Mark the wall fixing positions and drill two holes to suit the diverter wall plate. (Ideally this should be in the centre of a tile and not on a grout line.)

Note: A special longer 1.0 m diverter hose is available as a spare part if the position of the shower fittings cannot be installed as shown. Contact Mira Customer Service.

Caution! DO NOT drill into cables or pipes in the wall.

Insert the wall plugs and fix the diverter wall plate and secure with the wall screws supplied.

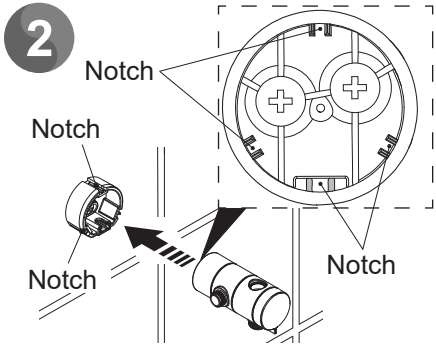

Slide the diverter partially over the wall plate ensuring the notches in the diverter lines up with the notches on the wall plate and fix temporarily in place.

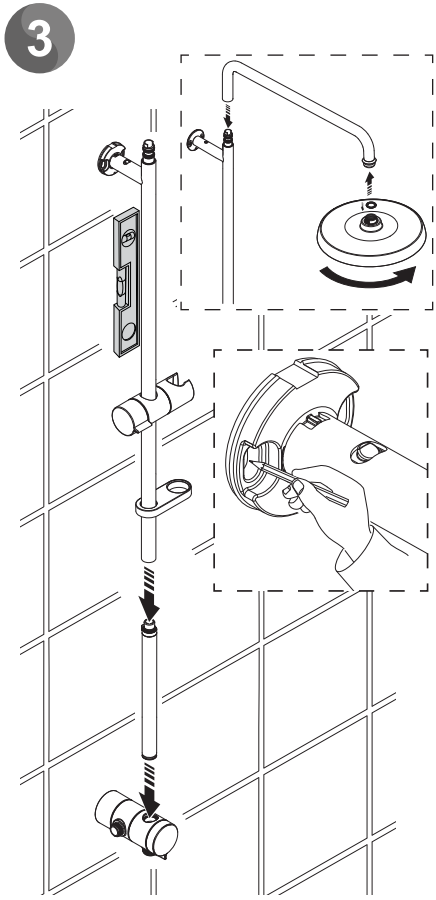

Fit the clamp bracket and hose retaining ring onto the middle bar, then screw into the lower bar. Loosely fit the riser fixing bracket into the middle bar arm.

Push the riser arm onto the middle bar.

DO NOT install the grub screw until step 6, as it may damage the o-rings.

Caution! Be careful not to damage seals.

Note: Spare o-rings are supplied if they are damaged during installation.

Fit the overhead.

Make sure that the lower bar is pushed fully into the diverter to engage the seal. Failure to do so will position the wall bracket incorrectly and may result in a leak from around the outlet of the diverter.

Mark holes for the riser fixing bracket. Use the middle arm assembly as a guide and ensure it is vertical.

Remove assembled bar along with the diverter and riser fixing bracket.

Caution! Failure to remove the diverter while drilling the holes above may allow brick dust to enter and damage the diverter seals.

4

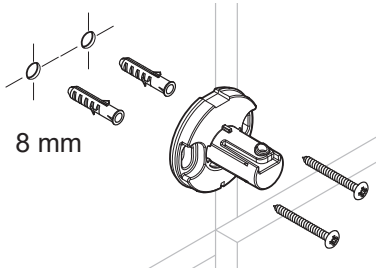

Drill the holes for the riser fixing bracket. Insert the wall plugs and fix the bracket to the wall using the screws supplied.

5

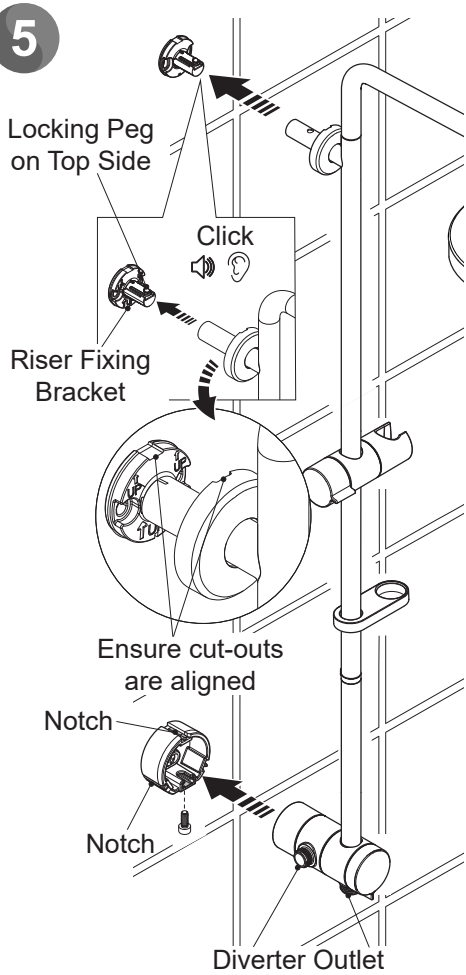

Loosely fit the concealing cover onto the middle bar. Ensure the lower bar is fitted correctly.

Fit the middle bar onto the riser fixing bracket and tighten the grubscrew with a 2.5 mm hex key. Fit the concealing cover over the bracket.

Slide the diverter over the wall plate ensuring the notches in the diverter lines up with the notches on the wall plate and fix in place using the screw supplied.

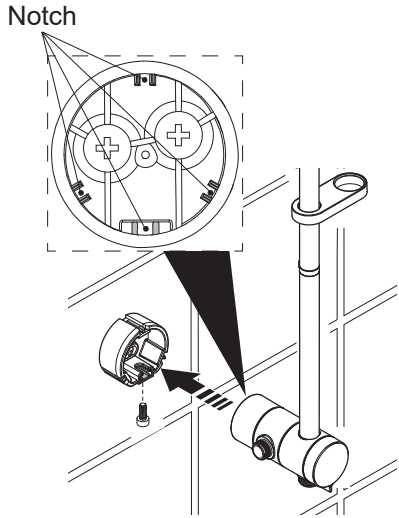

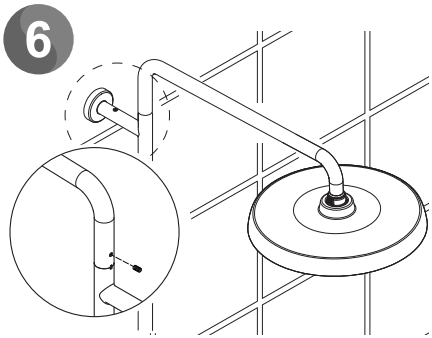

Angle the riser arm to the centre of the showering area and secure in place using the grubscrew.

Note: A spare grubscrew is supplied if damaged during installation.

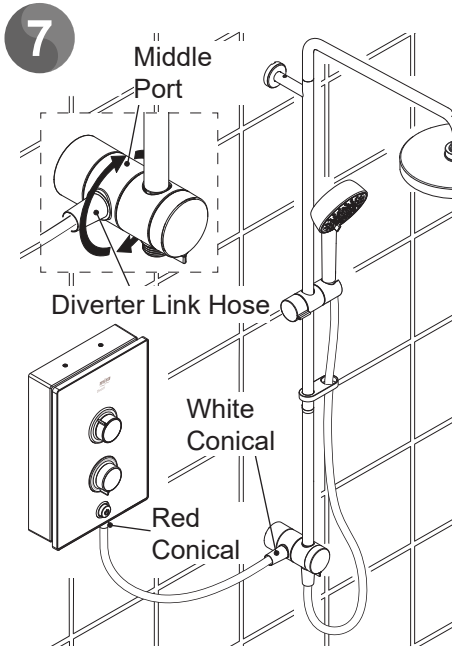

Connect the diverter link hose, clear conical nut with fine thread, to the diverter and rotate the middle port of the diverter to suit the position of the shower unit.

Note: The middle port may be stiff to rotate initially, connecting the hose will help to act as leverage.

Connect the red conical nut with coarse thread to the shower outlet. If the diverter link hose is not long enough for your installation, a longer 1 m hose is available from Mira Customer Service.

Feed the long shower hose through the hose retaining ring to connect to the diverter outlet and the handset. Connect the conical with green cover to the handset.

Place the showerhead assembly into the clamp bracket.

Note: DO NOT hang products from the diverter link hose.

Mira Fixed Single Outlet

1

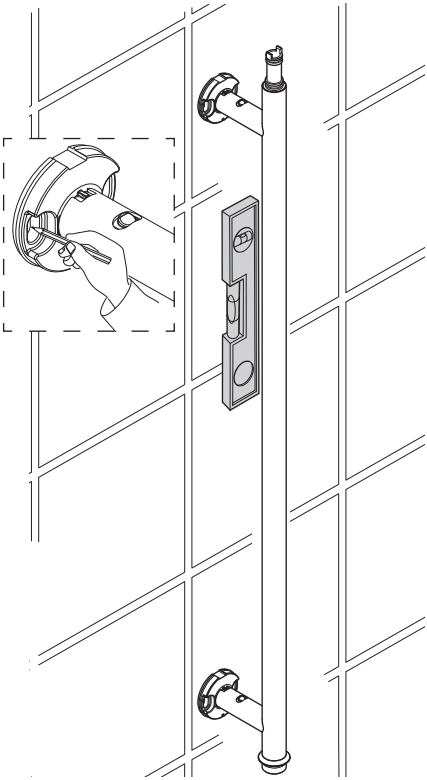

2

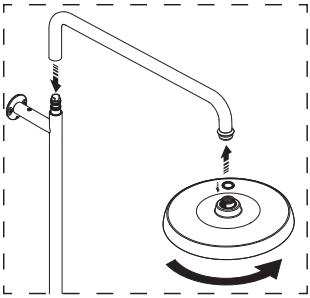

Push the swivel arm onto the fixed bar.

Caution! Be careful not to damage the seals.

Note: The spare o-rings are supplied if they are damaged during installation.

Fit the overhead.

Loosely fit the fixing brackets into the fixed bar.

Mark holes for the riser fixing bracket. Use the fixed bar assembly as a guide and ensure it is vertical.

3

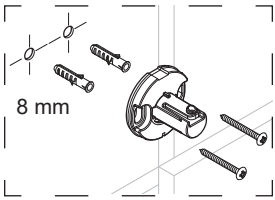

Remove assembled bar along with the riser fixing bracket.

Drill the holes for the riser fixing bracket.

Insert the wall plugs and fix the bracket to the wall using the screws supplied.

4

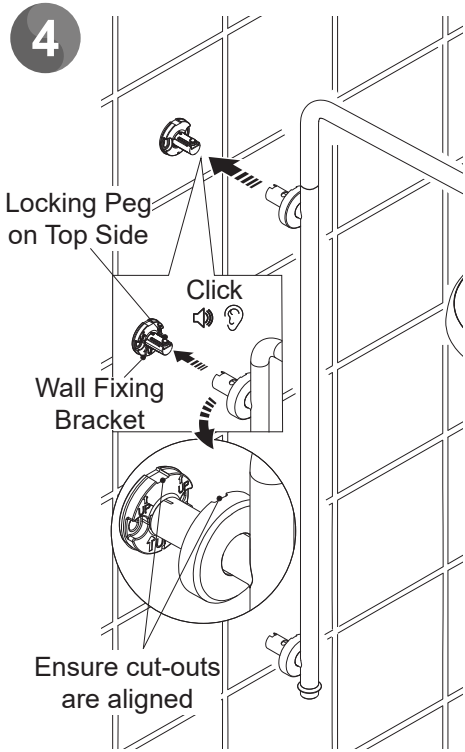

Loosely fit the concealing covers onto both ends of the fixed bar.

Push the fixed bar onto both wall fixing brackets and make sure they click into place.

Fit the concealing cover over the bracket.

Note: Pull gently on the fixed bar to make sure it is fully secured in position on both wall fixing brackets

---

5

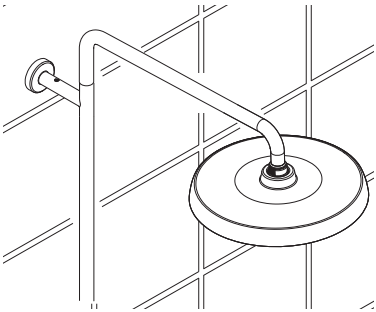

Angle the riser arm to the centre of the showering are.

6

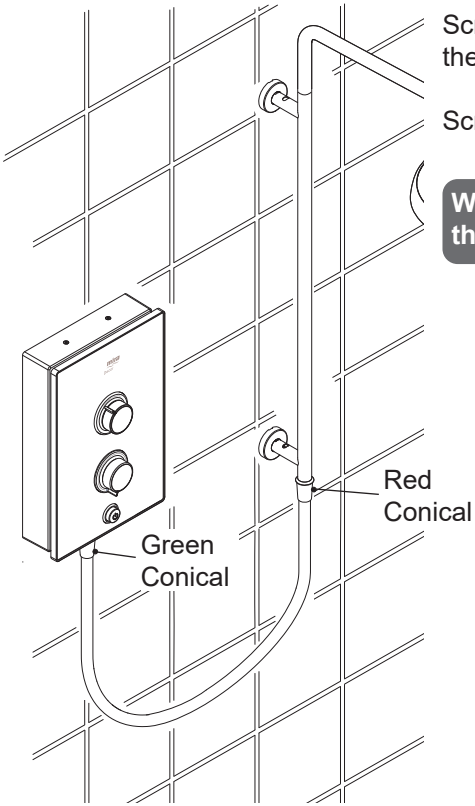

Screw the green conical onto the outlet of the shower.

Screw the white conical onto the fixed bar.

Warning! DO NOT hang products from the link hose

Commissioning

1

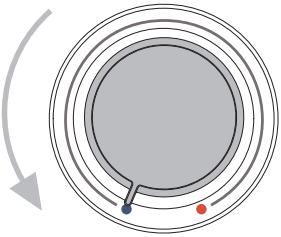

Turn temperature control to the cold position.

2

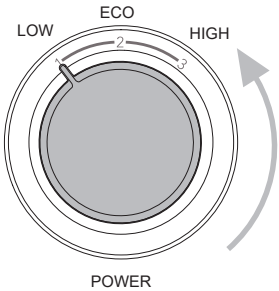

Turn power control to Low.

3

Switch on the electrical supply.

4

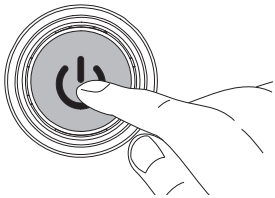

Push START/STOP button.

5

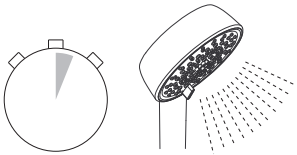

0 - 15 secs

Water flows freely within a few seconds, temperature remains cool.

6

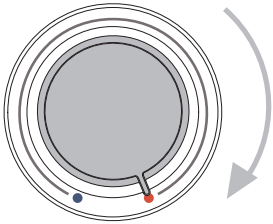

Slowly turn the temperature control to the hot position.

7

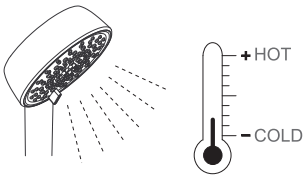

Flow is reduced and temperature remains cool.

8

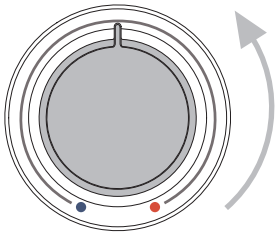

Turn temperature control back to the midway position.

9

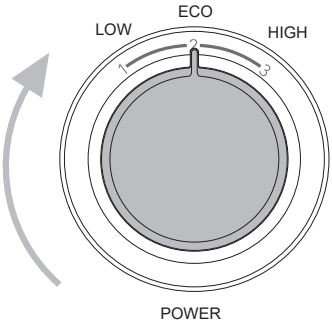

Turn power control to Eco.

10

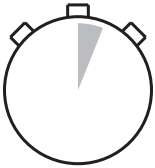

5 - 10 secs

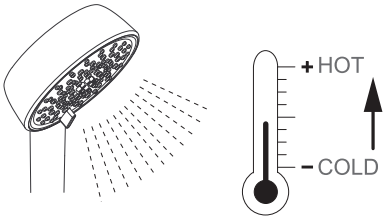

Temperature will rise slightly.

11

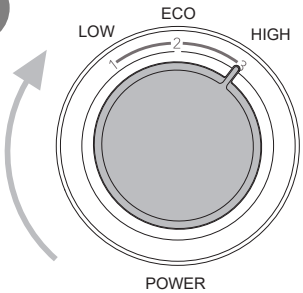

Turn power control to High.

12

5 - 10 secs

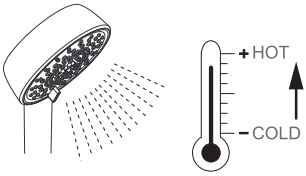

Temperature will rise further.

13

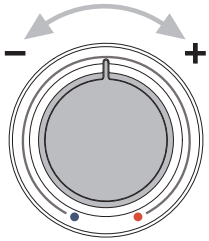

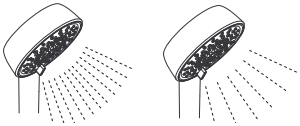

Adjust temperature as required.

Note: Flow rate will reduce when temperature setting is increased.

14

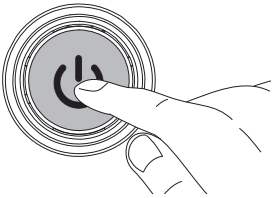

Push START/STOP button.

15

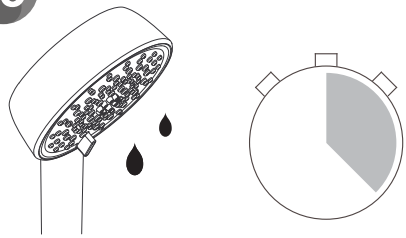

Shower turns off and water flow stops. A small amount of water may continue to drain/drip from the overhead shower or handset shower until the head is empty.

16

Switch off the electrical supply.

Note: A slight hissing sound may be heard from the shower during operation. High mains water pressure and high shower temperatures will affect the tone. This is quite normal in use.

User Operation

Mira Decor

Read the section **"Important Safety Information"** first.

1

Switch on the electrical supply.

2

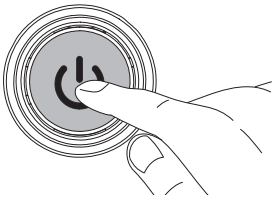

Push START/STOP button.

3

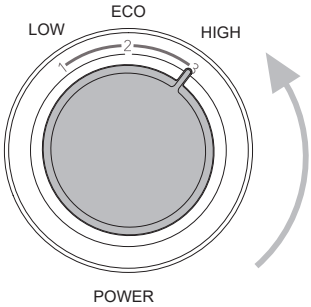

Turn power control to the desired position.

4

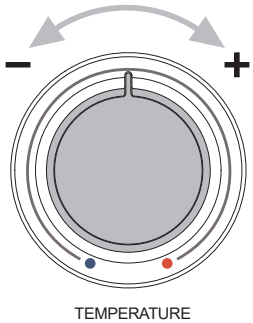

Adjust temperature as required.

5

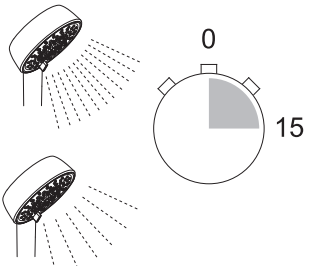

Allow 10 - 15 secs for any temperature adjustments to stabilise and reach the showerhead.

6

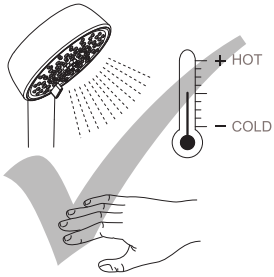

Check water temperature before entering shower.

7

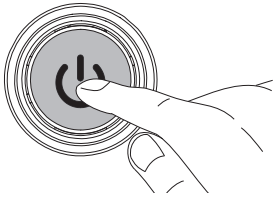

Push START/STOP button. Shower turns off and water flow stops.

8

Switch off the electrical supply.

9

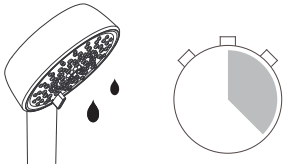

A small amount of water may continue to drain over a few minutes.

Warning! Turning the shower off and back on or adjusting the temperature control during showering may result in unstable temperatures at the showerhead. Always ensure the temperature has stabilised before re-using the shower.

DO NOT hold the showerhead against the body. This may cause product damage, injury or scalding.

DO NOT allow children to use the shower unsupervised or allow them to play with the shower fittings or controls.

Always make sure the shower hose is not kinked or damaged and the shower handset is not blocked before using the shower.

Note: A slight hissing sound may be heard from the shower during operation. High mains water pressure and high shower temperatures will affect the tone. This is quite normal in use.

Important! For Dual and Fixed Overhead Products
Using the overhead shower during winter months may require the desired outlet temperature to be increased. Cooler room temperatures could cause this to be increased too much and operate the cycling thermal switch. If the shower cycles hot and cold ensure the shower heads are clean and reduce the temperature setting at the control.

Warning! DO NOT hang products or items from any of the hoses. Kinked or damaged hoses can cause overheating & product failure

Diverter - Mira Decor Dual Outlet

The diverter lever operates as shown below:

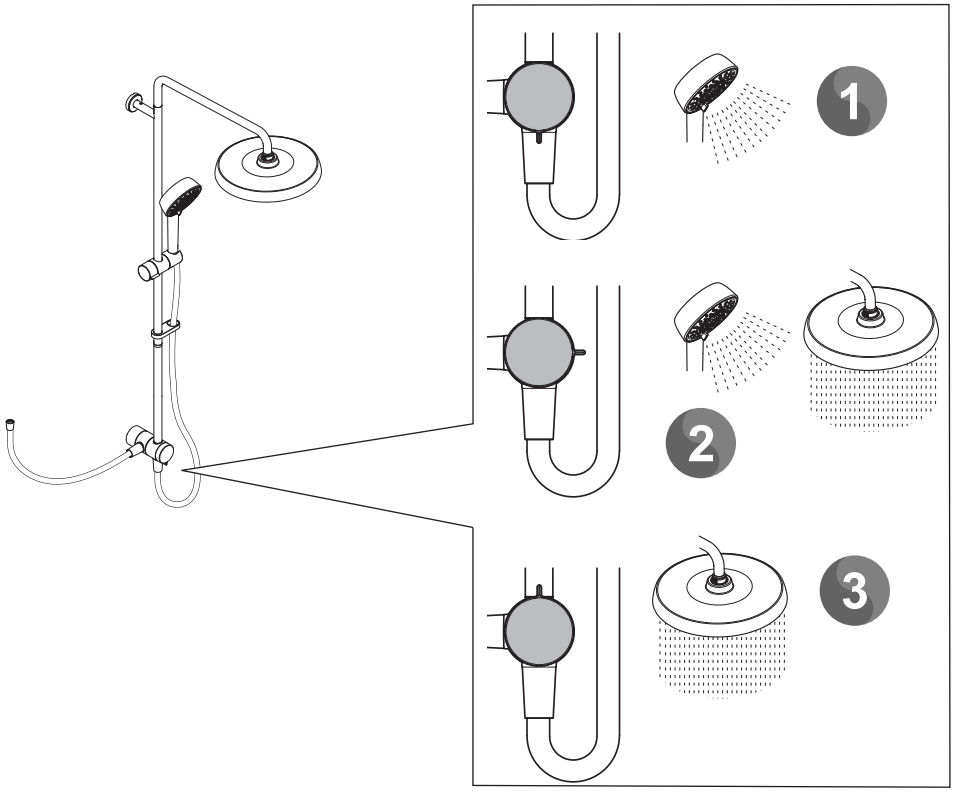

Control Lever Position 1 -
Water comes out of the showerhead.

Control Lever Position 2 -
At this point water will come out of both the overhead and the showerhead. However this is not recommended as there will be insufficient water flow.

Note: When diverting from showerhead to overhead a small amount of cold water may initially flow.

Control Lever Position 3 -
Water comes out of the overhead.

Important! DO NOT allow the overhead or handset spray water directly on to the electric shower. The overhead and handset must be positioned so this does not occur

User Trouble Shooting

If the malfunction has not been detailed in the fault finding table or it was not possible to correct the malfunction, professional assistance may be required. Any fault diagnosis remedies MUST be carried out by a competent person or contact Mira Customer Services to arrange a service engineer.

Symptom	Possible Cause	Possible Remedy
Shower fails to operate	Isolator switch in the off position	Switch on the electrical supply via the pull cord or wall mounted switch
	Fuse blown or MCB/RCD tripped, indicating possible electrical fault	Renew the fuse or reset the MCB/RCD. If fault persists, contact your installer
Shower cycles from hot to cold	Showerhead blocked or hose kinked	Remove and descale Showerhead.
	Water pressure below minimum required for shower operation	Make sure incoming mains water stopcock and/or shower isolating valve is fully turned on
	Temperature control or heater setting too high	Turn the power control to Eco or turn the temperature control until a cooler temperature is achieved
Unable to select a cool enough shower	Due to the rise in mains water supply temperature, the heater setting may be too high.	Turn the power control to Eco or turn the temperature control until a cooler temperature is achieved
	Showerhead blocked.	Remove and descale Showerhead.
	Hose kinked or blocked.	Check hose and replace if necessary.
Unable to select a hot enough shower (cold only).	Power control not on high.	Turn the power control to High.
	Temperature control on cool setting	Turn the temperature control until a hotter temperature is achieved.
	Water pressure below minimum required for shower operation.	Make sure incoming mains water stopcock and/or shower isolating valve is fully turned on.
Shower is not delivering hot enough showering temperature to the overhead only	The showerhead is fitted too high above the user and the water is cooling. Particularly noticeable if ambient temp of room is low.	A shorter bar is available from customer service to lower the height of the dual riser bar

Symptom	Possible Cause	Possible Remedy
Shower is too hot during the summer.	The incoming water is warmer in the summer, so the shower power setting is too high.	Turn the power knob to Eco and adjust the temperature knob until the desired temperature is reached.
Low or no flow	Showerhead blocked.	Remove and descale Showerhead.
	Hose kinked or blocked.	Check hose and replace if necessary.
	Other outlets (e.g. Toilet, garden hose, washing machine, etc.) drawing water while the shower is being used	Turn off other appliances whilst shower is in use.
	The incoming water supply stop valves, or the appliance isolating valve, is closed.	Open the stop/isolating valve completely.
	The power is off at the double pole switch.	Switch on the power at the double pole switch.
	The fuse is blown or the MCB/RCD has been tripped, indicating a possible electrical fault.	Renew the fuse or reset the MCB/RCD. If the fault persists, contact the shower installer.
Operation of Temperature Control has little or no effect on water temperature	Showerhead blocked.	Remove and descale Showerhead.
	Hose kinked or blocked.	Check hose and replace if necessary.
No hot water from shower, with the knobs in any position.	Other water outlets are being used during showering, causing the water pressure to drop below the minimum required.	Make sure the other water outlets, such as the washing machine or dishwasher, are not in use during showering.
	The water pressure is below the minimum required.	Make sure that the incoming water supply stop and the isolating valve are completely open. If the fault persists, contact the shower installer.
Showerhead continues to drip after shower turned off.	It is natural for all shower outlets to continue to expel water for a short period of time after use. It is not uncommon for larger deluge shower heads to expel water several hours after use due to the changes in the ambient temperature. Ensure all water outlets are kept enclosed within the water catchment area.	No Fault with shower

Note: What to do if something goes wrong. If your product does not work correctly check that it is installed and commissioned in accordance with our instructions. If this does not resolve the issue, contact us for help and advice. Refer to Customer Support page for more details.

User Maintenance

Always read the IMPORTANT SAFETY INFORMATION for your shower.

In the event of a malfunction of the shower, a fault finding table is provided in this guide detailing possible causes and remedies that may be carried out by non-qualified personnel.

WARNING - TO REDUCE THE RISK OF FIRE, ELECTRIC SHOCK, INJURY OR PRODUCT DAMAGE:

1. There are no user serviceable parts inside the shower. Only qualified, competent personnel should remove the front cover, mains connections are exposed when the cover is removed.
2. Switch the shower off at the isolator switch before performing any user maintenance or before cleaning the shower.

Cleaning the showerhead

Many household and commercial cleaners, including hand and surface cleaning wipes contain abrasive and chemical substances that can damage plastics, plating and printing and should not be used. These finishes should be cleaned with a mild washing up detergent or soap solution, and then wiped dry using a soft cloth.

De-scaling the Showerhead and inspecting the hose:

It is IMPORTANT to keep the showerhead and hose clean and free from blockage to make sure your shower performs to its optimum. The showerhead MUST be regularly cleaned and the hose MUST be regularly inspected to ensure there is no internal collapse or blockage that could reduce the flow.

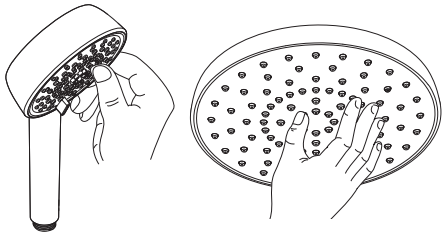

Use your thumb or a soft cloth to wipe any limescale from the soft nozzles

Unscrew the hose from the showerhead and the shower outlet.

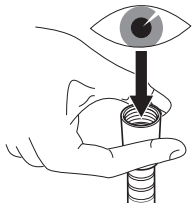

Inspect the hose.

Warning! Failure to keep the showerhead nozzles clear or inspect the hose for blockage or internal/external collapse can restrict the flow rate from the shower. This may cause damage to the shower or result in the temperature delivered to the user rising to unsafe levels with a risk of scalding. You MUST ALWAYS check the temperature before using the shower.

Servicing

Always read the Important Safety Information before carrying out any servicing or maintenance.

Warning! There are no user serviceable parts inside the shower. Servicing of the shower must only be carried out by qualified, competent personnel following the instructions provided in this guide and those provided with any spare part.

Before replacing any parts, ensure that the underlying cause of the malfunction has been resolved.

Cleaning the Inlet Filter

Warning! Isolate the electrical and water supplies before removing the cover.

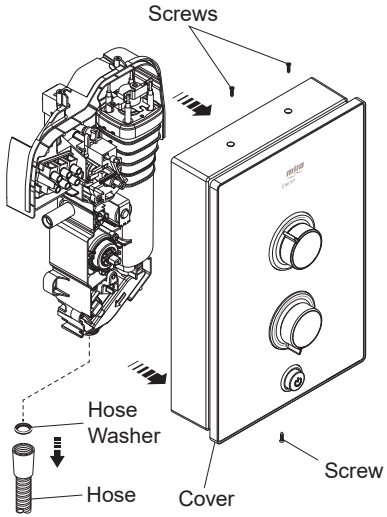

1. Remove the shower hose.

   Note: Retain the hose washer for further use.

2. Remove the three screws that hold the cover on the shower and remove the cover.

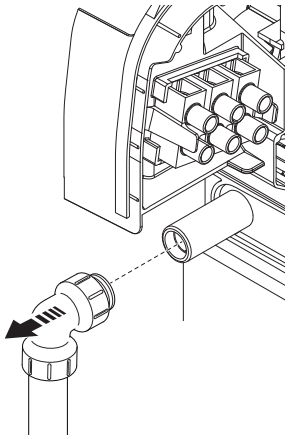

3. Remove the elbow from the inlet connector.

   Note: Depending on your installation it may be necessary to remove the shower from the wall to allow filter removal. (Refer to the **Installation Section**)

4 Remove the filter and rinse under a running tap to remove any lodged particles.

5 Refit the inlet filter. Refer to the **Installation Section** for pipework reconnection or refitting the shower to the wall.

6 Connect the shower hose.

Note: Ensure the hose washer is fitted inside the hose.

7 Follow the steps detailed in section: **'COMMISSIONING'** to prepare the shower for use.

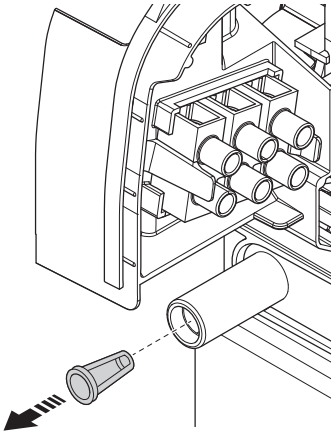

Spare Parts

Electric Shower

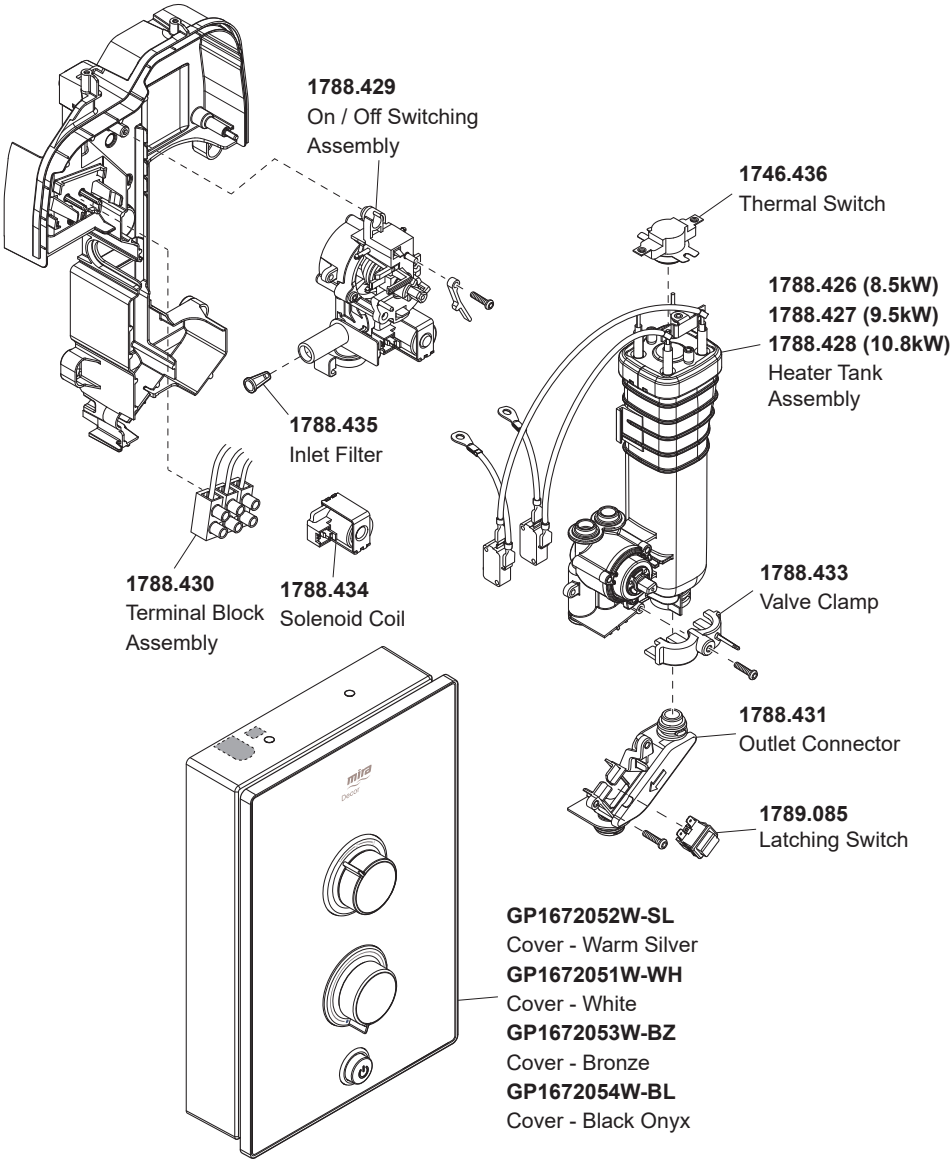

1693.331 Component Pack (Not illustrated)
1788.432 Wire Pack (Not illustrated)
1788.436 Screw Pack (Not illustrated)

Single Variable

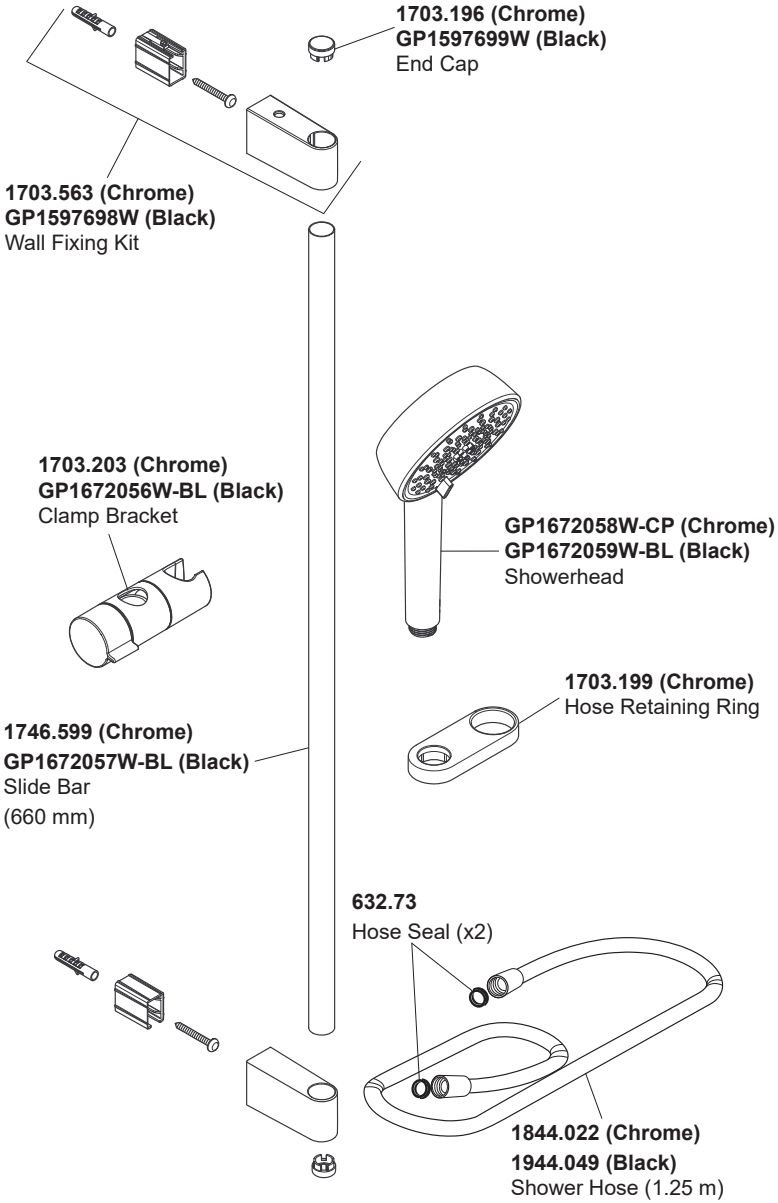

Dual Variable

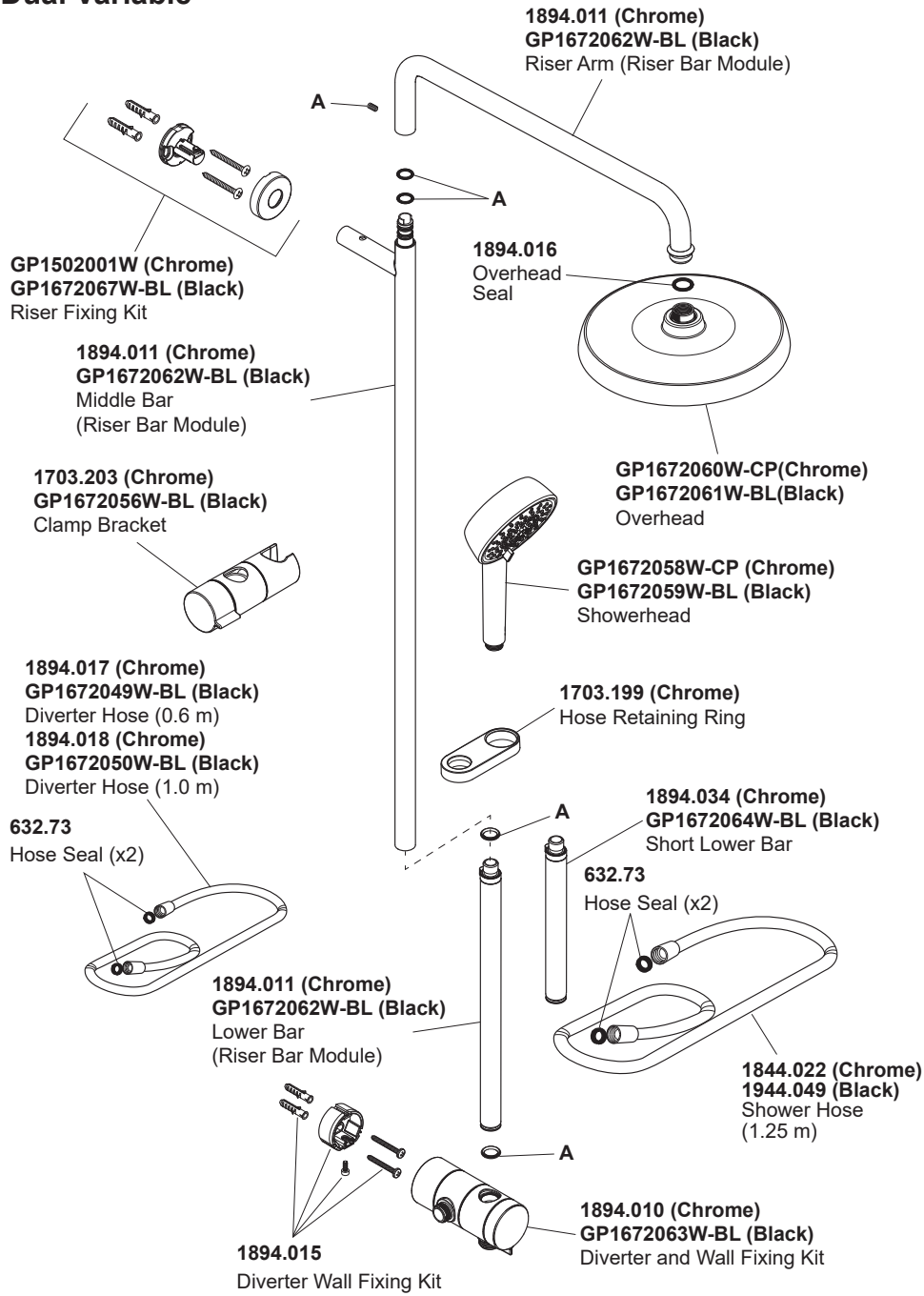

1894.019 Seal and Grub Screw Pack (Components marked as ‘A’)

Fixed Single Variable

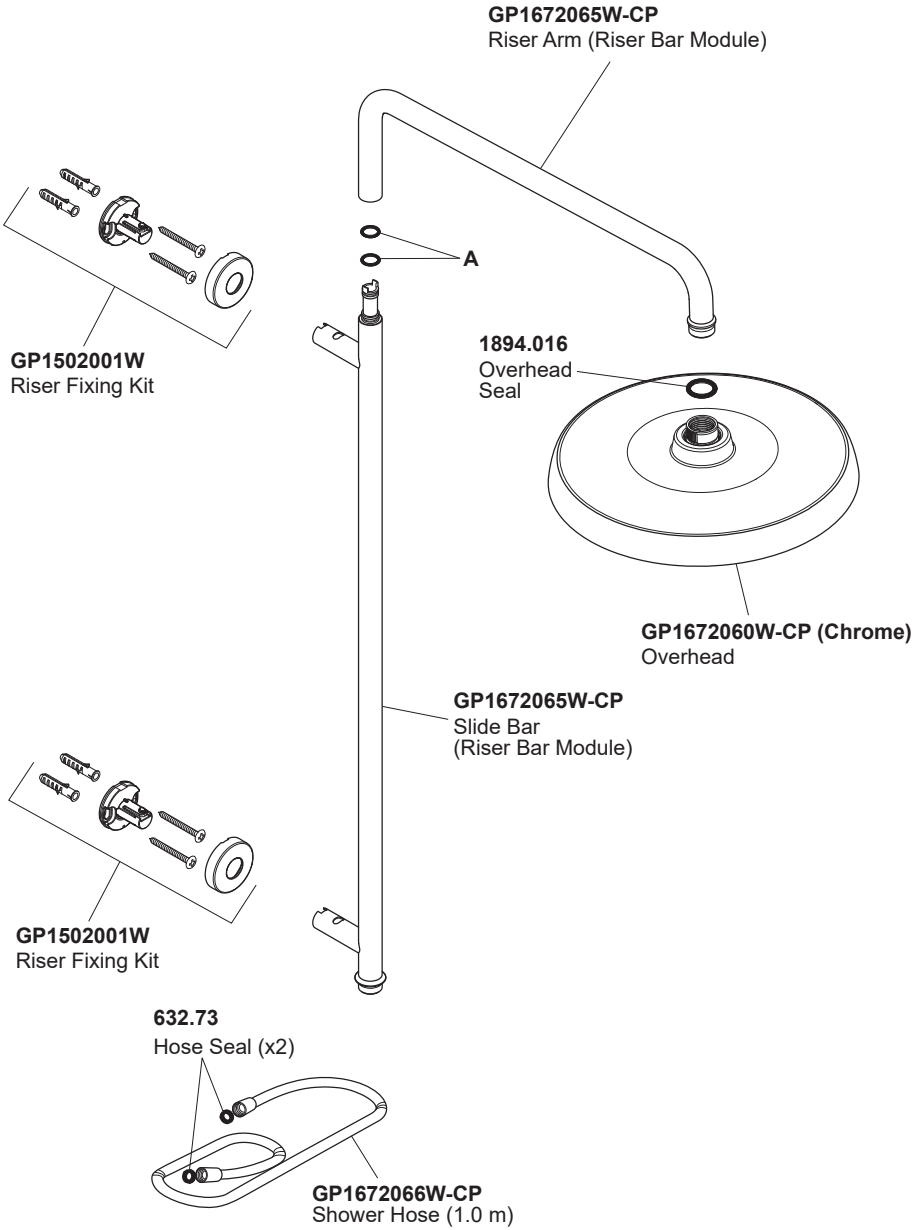

1894.019 Seal Pack (Components marked as ‘A’)

Customer Support

Guarantee

Your product has the benefit of our manufacturer's guarantee which starts from the date of purchase. This guarantee only applies in the United Kingdom and Republic of Ireland.

Activating Your Guarantee

Registering your guarantee is quick and simple. To ensure your product is covered, please register online .

Scan the QR code to activate your guarantee now or call 0800 5978551 within 30 days of purchase (UK only).

What is Covered:

- The guarantee applies solely to the original installation under normal use.
- The product must be installed and maintained in accordance with the instructions given in this guide.
- Servicing must only be undertaken by us or our appointed representative.
- Repair under this guarantee does not extend the original expiry date. The guarantee on any replacement parts or product ends at the original expiry date.
- For shower fittings or consumable items we reserve the right to supply replacement parts only.

The guarantee does not cover:

- Call out charges for non product faults (such as damage or performance issues arising from incorrect installation, improper use, inappropriate cleaning, lack of maintenance, build up of limescale, frost damage, chemical attack, corrosion, system debris or blocked filters) or where no fault has been found with the product.
- Water or electrical supply, waste and isolation issues.
- Routine maintenance or replacement parts to comply with the requirements of Building / Plumbing / Electrical Standards or Schemes.
- Compensation for loss of use of the product or consequential or indirect loss of any kind.
- Damage or defects caused if the product is repaired or modified by persons not authorised by us or our appointed representative.
- Accidental or wilful damage.
- Products purchased ex-showroom display.
- Disinfection or descaling to reduce bacterial growth or contamination.

What to do if something goes wrong

If your product is not working correctly please refer to this manual or the Mira website for fault diagnosis and to check that it is installed and commissioned in accordance with our instructions. If this does not resolve the issue, our Customer Services team are here to help get you back up and running. To help us solve your problem quickly, please have your product name, power rating (if applicable) and date of purchase to hand.

Visit www.mirashowers.co.uk

Visit our website to register your guarantee, book a service visit, diagnose faults and purchase products.

Spares and Accessories

We stock a full range of spare parts and fittings and are all available to purchase either online or over the phone. Our online spare parts selector tool will help you quickly and easily identify the spare part for your product.

Visit www.mirashowers.co.uk/parts-accessories

Replacements and Repairs

In the unlikely event that your product needs a repair, our nationwide repairs and installation team are here to help. You can book a convenient date and time online.

Scan the QR code to book a service visit now or visit www.mirashowers.co.uk/support/repair-services/repair-service

We also offer a comprehensive replacement service for when your product needs a little refresh, visit our website or contact our team for more information on our replacement services.

Help us improve

Your experience is important to us and your review (whether good, bad or otherwise) will be posted on Trustpilot.com immediately to help other people make more informed decisions.

Visit uk.trustpilot.com/review/www.mirashowers.co.uk

Need to get in touch?

UK

T: 0800 001 4040
E: askus@mirashowers.com
www.mirashowers.co.uk

Eire

T: 01 531 9337
E: customerserviceeire@mirashowers.com

Mira is a registered trade mark of Kohler Mira Limited.

The company reserves the right to alter product specifications without notice.

Registered Office:
Cromwell Road,
Cheltenham,
Gloucestershire
GL52 5EP

EU Importer address:
Kohler France S.A.S.
30 Boulevard de la Bastille,
75012 Paris,
France

© Kohler Mira Limited, August 2026